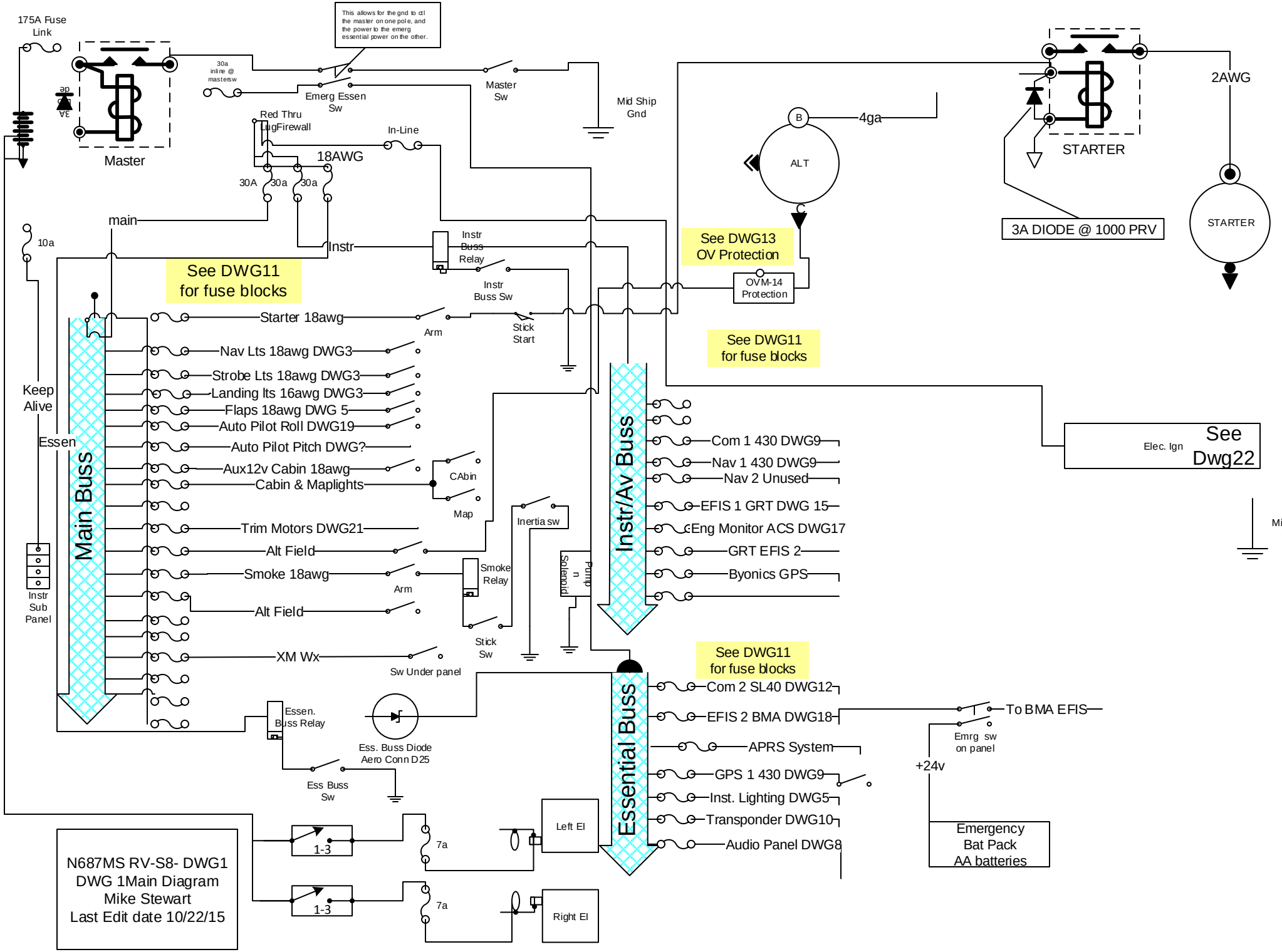
175A Fuse Link
This allows for the gnd to ctl the master on one pole, and the power to the emerg essential power on the other.
30a inline @ mastersw
Master
Emerg Essen Sw
Master Sw
Mid Ship Gnd
Red Thru LugFirewall
In-Line
18AWG
30A
30a
30a
main
10a
Instr
Instr Buss Relay
Instr Buss Sw
See DWG11 for fuse blocks
Starter 18awg
Arm
Stick Start
Nav Lts 18awg DWG3
Strobe Lts 18awg DWG3
Landing lts 16awg DWG3
Flaps 18awg DWG 5
Auto Pilot Roll DWG19
Auto Pilot Pitch DWG?
Aux12v Cabin 18awg
Cabin & Maplights
CAbin
Map
Trim Motors DWG21
Alt Field
Smoke 18awg
Smoke Relay
Arm
Alt Field
Stick Sw
XM Wx
Sw Under panel
Keep Alive
Essen
Main Buss
Instr Sub Panel
Essen. Buss Relay
Ess. Buss Diode Aero Conn D25
Ess Buss Sw
1-3
7a
Left El
1-3
7a
Right El
N687MS RV-S8- DWG1
DWG 1Main Diagram
Mike Stewart
Last Edit date 10/22/15
Inertia sw
Solenoid
Pump
Instr/Av Buss
Com 1 430 DWG9
Nav 1 430 DWG9
Nav 2 Unused
EFIS 1 GRT DWG 15
Eng Monitor ACS DWG17
GRT EFIS 2
Byonics GPS
See DWG11 for fuse blocks
Essential Buss
Com 2 SL40 DWG12
EFIS 2 BMA DWG18
APRS System
GPS 1 430 DWG9
Inst. Lighting DWG5
Transponder DWG10
Audio Panel DWG8
To BMA EFIS
Emrg sw on panel
+24v
Emergency Bat Pack AA batteries
See DWG13 OV Protection
OVM-14 Protection
B
ALT
C
4ga
STARTER
2AWG
3A DIODE @ 1000 PRV
STARTER
See DWG11 for fuse blocks
Elec. Ign
See Dwg22
Mid Ship Gnd

N687MS RV-S8- DWG2
Instrument Panel
Diagram
Mike Stewart
Last Edit date 10/22/15

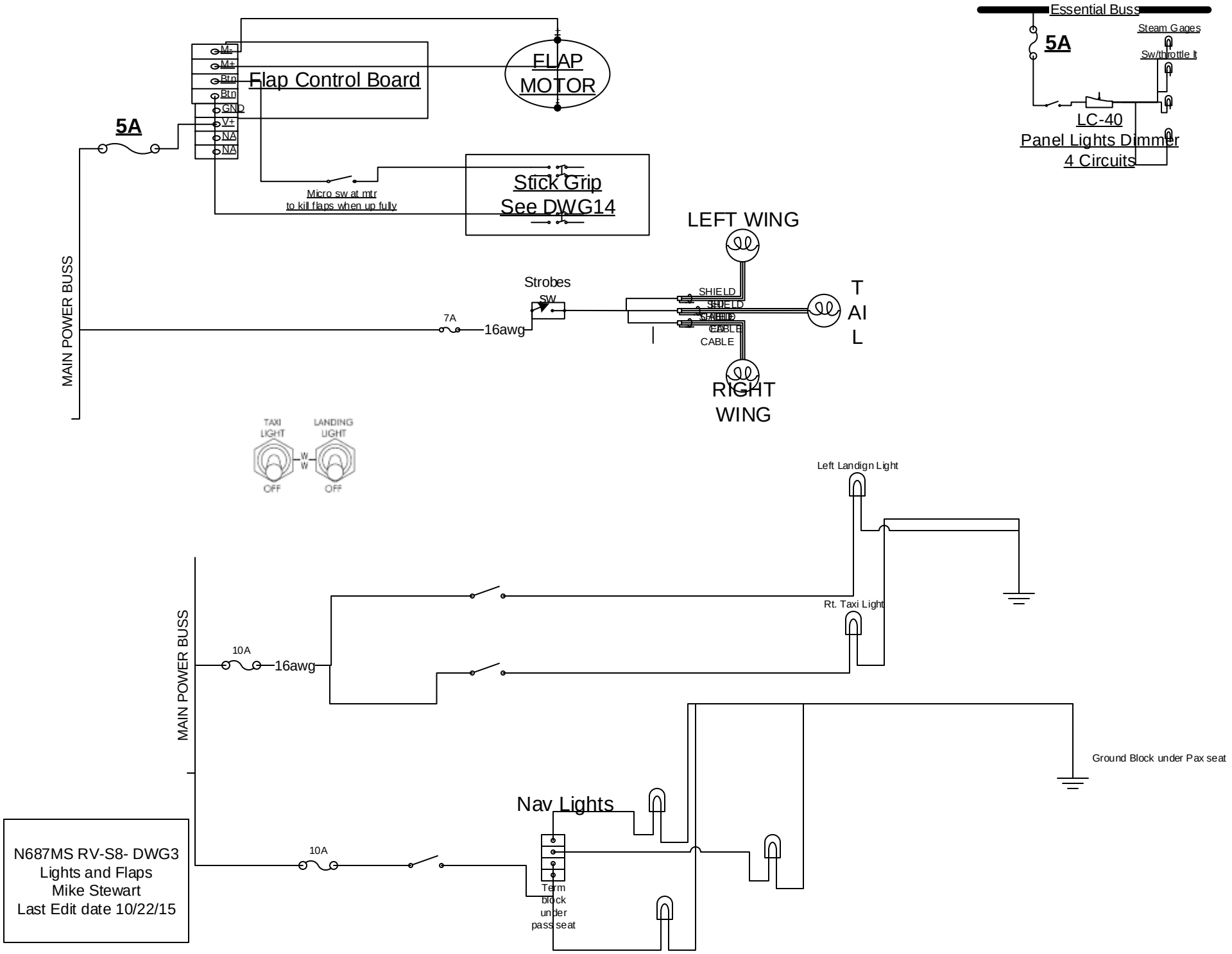
Essential Buss
5A
Steam Gages
Sw/throttle lt
LC-40
Panel Lights Dimmer
4 Circuits
M-
M+
Btn
Btn
GND
V+
NA
NA
Flap Control Board
FLAP
MOTOR
5A
Micro sw at mtr
to kill flaps when up fully
Stick Grip
See DWG14
LEFT WING
Strobes
SW
SHIELD
SHIELD
SHIELD
CABLE
CABLE
T
AI
L
7A
16awg
MAIN POWER BUSS
RIGHT
WING
TAXI
LIGHT
LANDING
LIGHT
W
W
OFF
OFF
Left Landign Light
Rt. Taxi Light
MAIN POWER BUSS
10A
16awg
Ground Block under Pax seat
Nav Lights
10A
Term
block
under
pass seat
N687MS RV-S8- DWG3
Lights and Flaps
Mike Stewart
Last Edit date 10/22/15

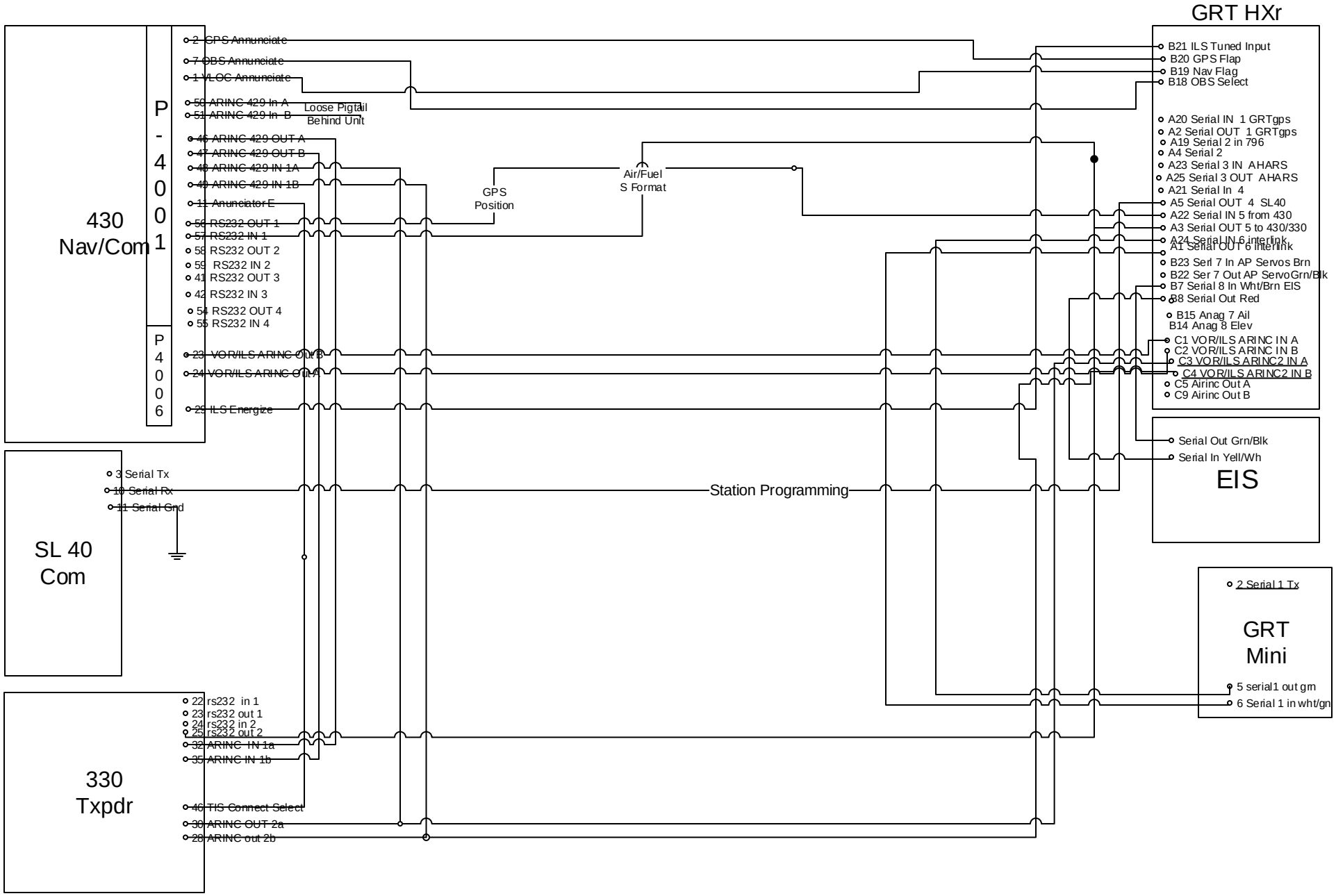

N687MS RV-S8- DWG4
Serial Interconnects
Mike Stewart
Last Edit date 10/22/15

Note:
ALL serial lines are shielded. All shields to terminate both ends at tray. Pigtail leads no more than 3"

Appendix D Top Connector Interconnect

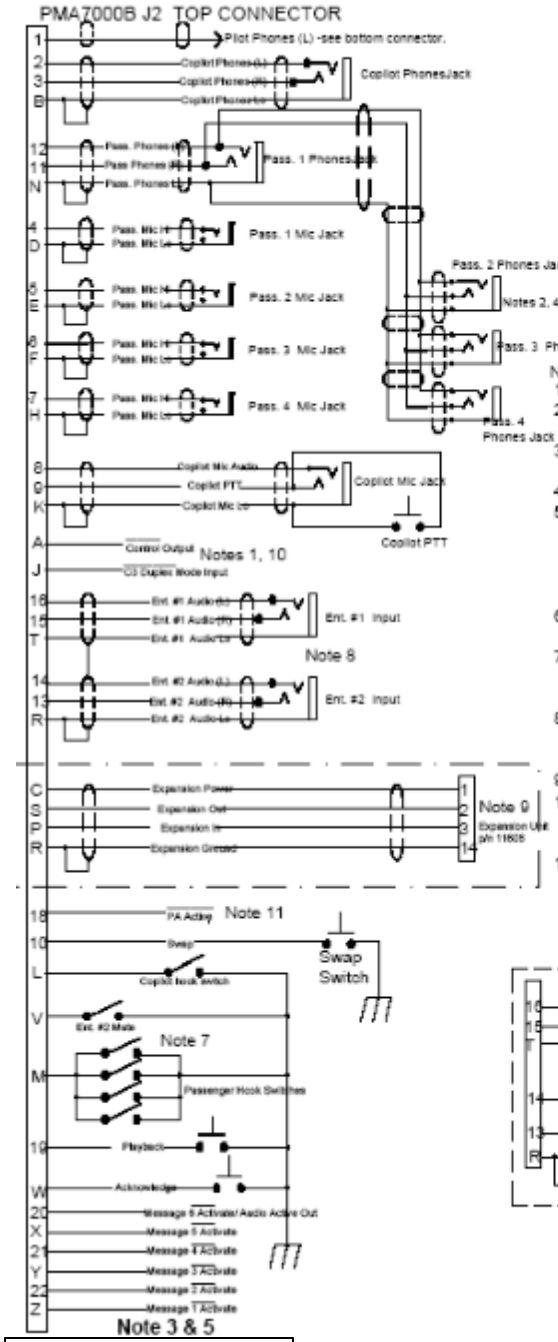

Notes:
1. Pin A is pulled low when AUX is active
2. All shields should be grounded at audio panel only other end remains floating.
3. See Message Annunciation section for more information. SWITCHES /INPUTS ARE NORMALLY
4. All phone and mic jacks must be floating from ground.
5. Audio Active Out is available on certain units WITHOUToption 1, with serial number XXXX-C1489 and above. This is connected to Apollo CNX80 for audio prioritization. If option 1 is desired, contact PS Engineering.
6. All wiring to conform to MIL 22750 or 27500, and must be shielded as shown.
7. Passenger hook switches to be located at positions where phone acess is desired. Grounding of any switch causes all passengers to be heard on the cellphone.
8. Music inputs are independent. Connect together to use a single source for both inputs. For music distribution information, see Section 3.6.3.1.
9. For expansion unit, use part number 11606 or 11606R onl
10. When Pin J is grounded, the audio panel is in Com 3 duplex mode. This is used to interface with AirCell AT.01 or cellular phone.
11. When pin 18 is switched to ground, the PA mode is activ placing pilot microphone on speaker output when PTT ac See Sect 2.5.13.

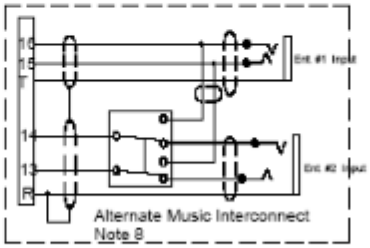

Connector viewed from the rear

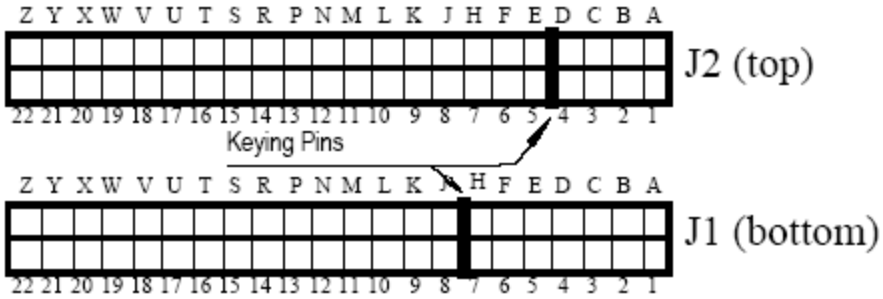

N687MS RV-S8- DWG7
Audio Panel Btm Conn.
Mike Stewart
Last Edit date 10/22/15

Appendix C Bottom Connector Interconnect

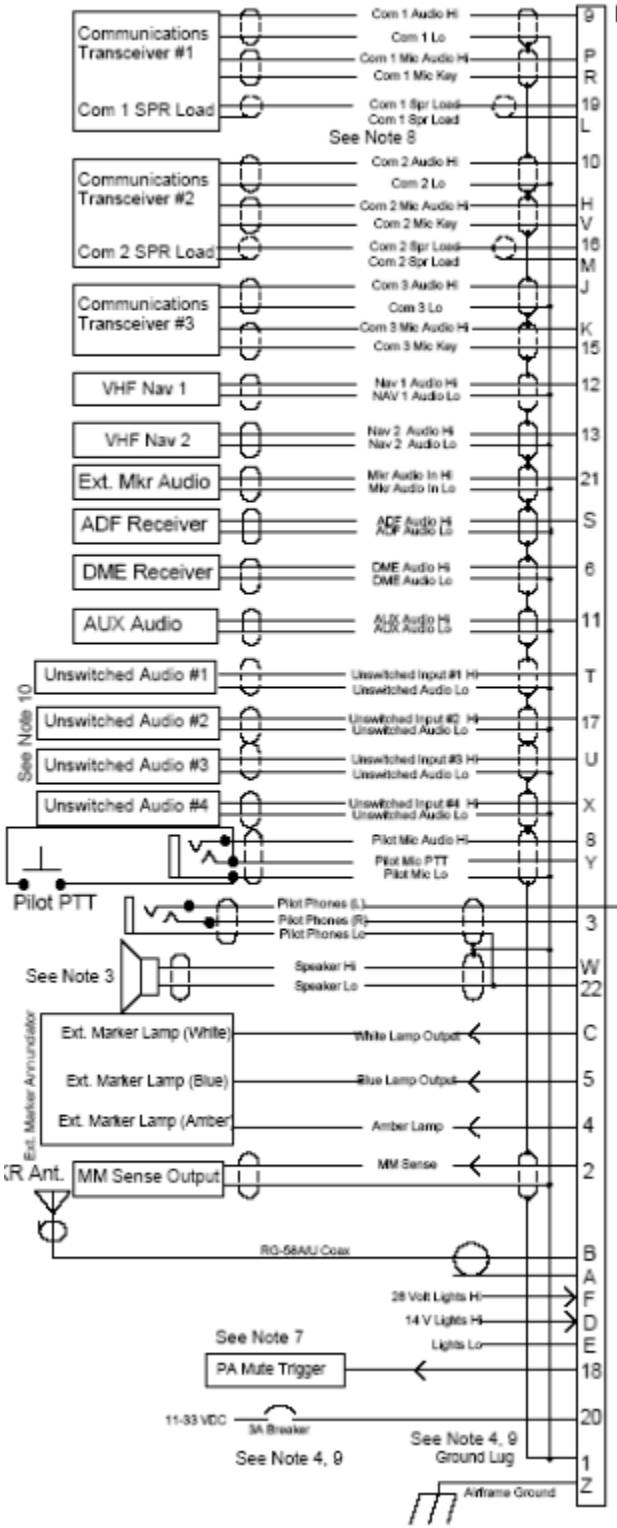

Bottom Connector, J1

Notes:

1. Pins 7, N, 14, are not used.
2. All shields should be grounded at audio panel only other end remains floating.
3. Speaker and Pilot Headphone ground returns MUST be kept separate and connected to pin 22.
4. All Power, and Ground wires must be #18 gage wire Lighting #22 AWG, other wires minimum #24 AWG
5. Pilot mic and headphone jacks must be isolated from grou
6. Pin 20 connected through a 3 A breaker.
7. PA Mute is a TTL level logic output that is pulled low when PTT active.
8. Speaker loads may be required on some transceivers. Consult transceiver manufacturer's Informati
9. Installations require a 3 A breaker. Retrofit 28V Installations may remove dropping resistor and change breaker to 3A.
10. Audio applied to Pins T, 17, U and X, is always presente in speaker, pilot and copilot headphones, regardless of SPR switch or PTT.
11. All shielded wires must be MIL 22750 or 27500.
12. Connect pilot headphone (L) to top connector, Pin 1, using 3-conductor wire.
13. Key pin between pin 7 and 8.
14. External marker audio input to Pin 21 for units without internal receiver only.
15. Mic bias is not required by the PMA7000B, however, it may be left connected if present.

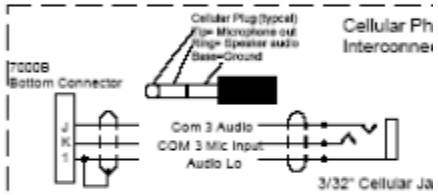

For Duplex (cell phone) operation
Pin J of top connector MUST BE GROUNDED
This is a typical Interconnect
PS Engineering does not guarantee compatability in all cases.

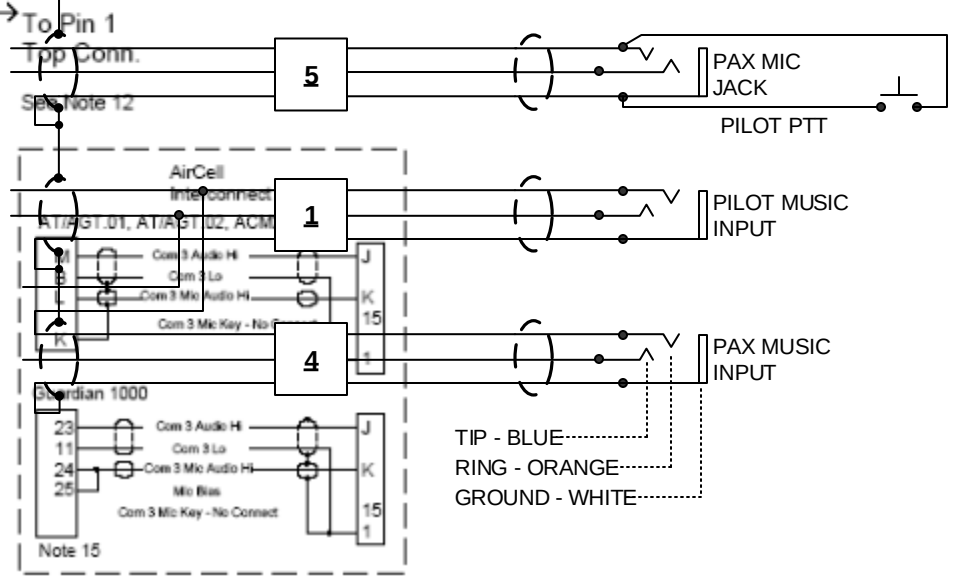

N687MS RV-S8- DWG8
Audio Panel
Mike Stewart
Last Edit date 10/22/15

Connector viewed from the rear

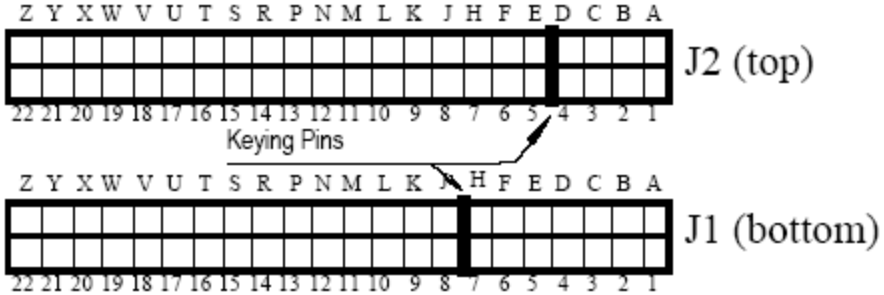

FUSES
AMPS COLOR

1.....BLACK
2.....GREY
3.....VIOLET
4.....PINK
5.....TAN
7 1/2.....BROWN
10.....RED
15.....BLUE
20.....YELLOW
25.....NATURAL
30.....GREEN
35.....BLUE GREEN
40.....ORANGE

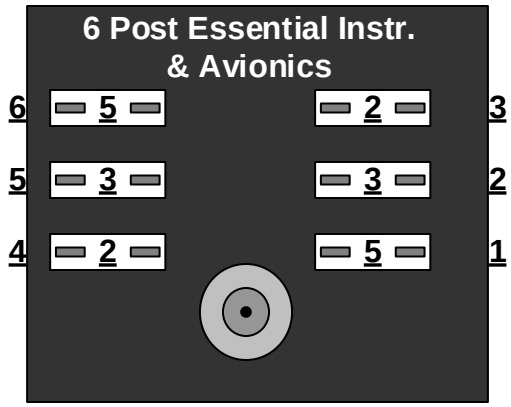

Instr/Av Buss Essen

1 = Com 2 SL40
2 = Efis 2 GRT Mini
3 = APRS System
4 = Instr. Lights
5 = Audio Panel
6 = Txponder

Notes:
1. Elec. Ign has an in-line fuse and is always hot

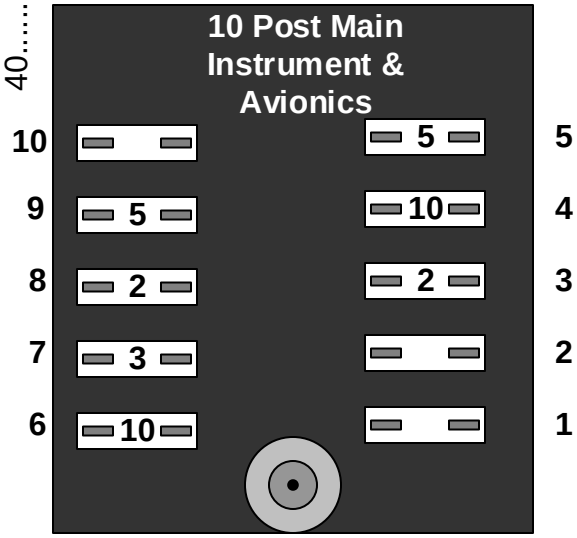

Inst/Av Buss main

1 =
2 =
3 =
4 = Com1 430
5 = Nav/GPS 1 430
6 = 796/GDL39
7 = EFIS 1 GRT
8 = EIS GRT
9 = GRT Ext GPS
10 =

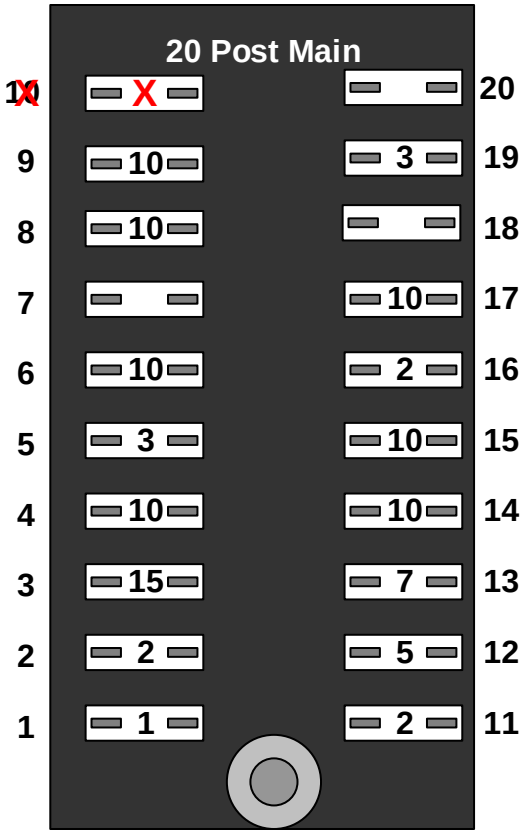

MAIN POWER BUSS

1 = Starter
2 = Nav Lights
3 = Strobe Lights
4 = Landing Lights
5 = Flaps
6 = BT Relay Board
7 = Stereo
8 = Accy 12v
9 = Cabin/Panel/MAplights
10 = Not used, bad location
11 = XW Wx
12 = Atl. Field
13 = Smoke
14 = Fuel Pump
15 = Trim Motors
16 = AP Servos
17 = Pitot Heat
18 =
19 = Pass GPS
20 = Alt. 2 Field

N687MS RV-S8-DWG11
Fuse Blocks
Mike Stewart
Last Edit date 10/22/15

Rear Connector Pinout

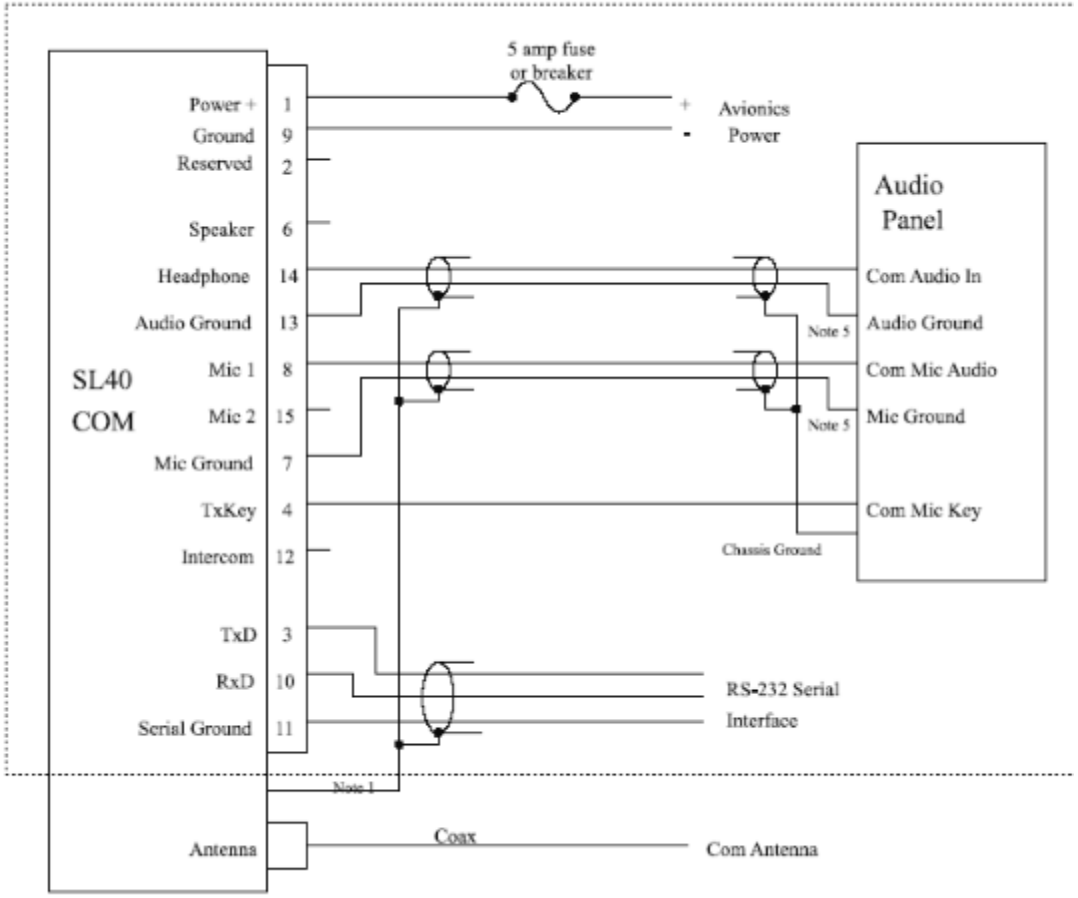

Table 2 Connector Pinout

Pin #	I/O	Connection	Function
1	I	Power +	main DC power input
2	I	Reserved	Do not connect
3	O	TxD	RS232 serial data output
4	I	TxKey	transmit enable key, pulled low to transmit
5	--	NC	Do not connect
6	O	Speaker	speaker terminal output
7	I	Mic ground	microphone input ground connection
8	I	Mic 1	microphone input #1
9	I	Power ground	main power ground input
10	I	RxD	RS232 serial data input
11	O	Serial ground	RS232 signal ground
12	I	Intercom select	intercom function select, pulled low to turn on the intercom function
13	O	Audio ground	speaker and headphone ground connection
14	O	Headphone	headphone terminal output
15	I	Mic 2	microphone input #2

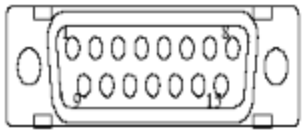

Viewed from rear of unit

N687MS RV-S8-
DWG12
Com SL40
Mike Stewart
Last Edit date 10/22/15

B&C SD
20 amp
standby
Alternator

The SD-20 is a high-performance spline-driven alternator that mounts on a standard vacuum pump accessory pad. It may be used either as a primary or a stand-by alternator for a rated output of 20 amps @3500 alternator RPM. Constructed of all NEW materials (with absolutely NO "remanufactured" content), the SD-20 is designed for durable service, with heavy-duty sealed ball-bearings, two cooling fans, a dynamically balanced rotor, and a special "shear section" designed into the drive coupling.

The SD-20 is available for both 14 volt and 28 volt applications, and is externally-regulated. It may be appropriately matched with our LR3C, LS-1A, or SB1B Controllers (depending on your application and electrical system configuration).

Measuring 4.6" wide and 6" deep, and weighing only 5.75 lbs., the SD-20 will clear the tachometer cable and oil filter on stock Lycoming engines.

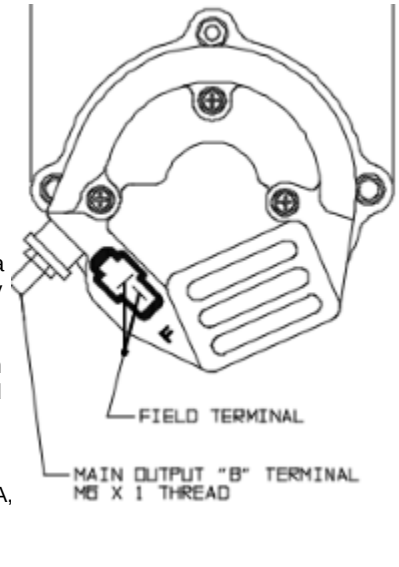

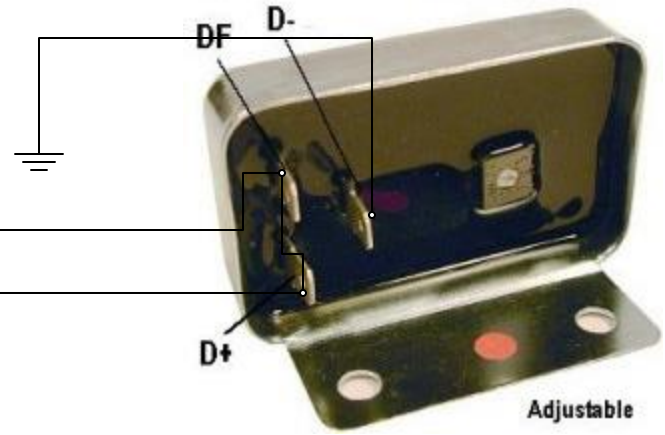

http://www.davebarton.com/AdjustableVoltage.html
Mounted to the upper right firewall.

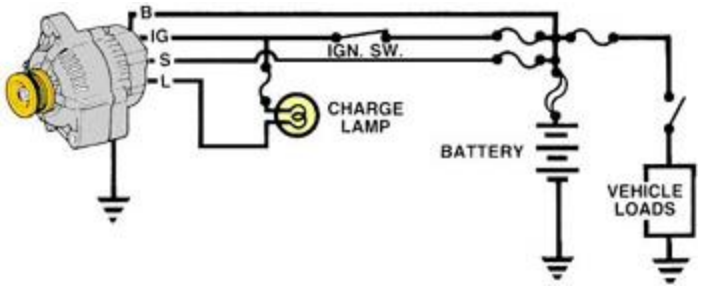

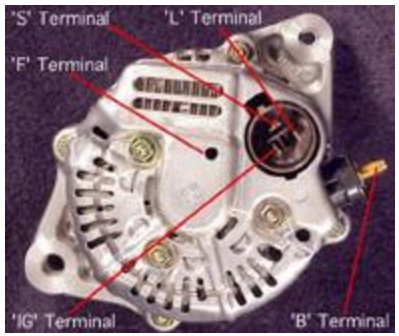

Note from Web http://www.f1-rocketboy.com/alternator.htm I have disconnected the "S" terminal and it works perfectly. You may be interested to know... The idiot light (charge lamp) only works when the "IG" terminal is powered. If the alternator were to fail in-flight, turning off the power to "IG" terminal will extinguish the charge lamp.
It "IGN SW" is my alternator switch.
The "S" terminal is a remote sensing terminal for the regulator. It is intended to sense the actual voltage at the battery after wiring losses etc. Then it adjusts the alternator to produce whatever is needed to end up with the desired voltage at the battery. Connecting the "S" and IG" terminals at the alternator will likely reduce the regulated output voltage of the alternator to around 13.6 V, but I haven't tested that theory yet. As it is, it puts out 14.5 V.

13214 manufacturer part number for the altenator. 14684 works also. The first one is 1.25lbs lighter. A 14824 is now available for a Chevy SPrint

N687MS RV-S8-DWG13
Alt & Standby Alt..
Mike Stewart
Last Edit date 10/22/15

3.1.5 GDL 39 to Bare Wire Power/Data Cable (P/N 010-11686-40)

Connection	Wire Color	AWG
Vin 10-32 VDC	Red	26
Discrete Input (see note)	Gray	28
Rx B (Data In)	White/Orange	28
Tx B (Data Out)	Orange	28
Rx A (Data In)	White/Green	28
Tx A (Data Out)	Green	28
Ground	Black	26

Table 3-1 GDL 39 to Bare Wire Power/Data Cable Connections

Figure 3-5 GDL 39 to Bare Wire Power/Data Cable

NOTE: *The Discrete Input may be used for a remote On/Off switch. Grounding this input turns the unit on and removing ground turns the unit off. If a remote switch is not used, do not connect this wire.*

Connection	Wire Color
Power	Red
Power Ground/Data Ground	Black
TX1 (Data Out)	Blue
RX1 (Data In)	Yellow
TX2 (Data Out)	Orange
RX2 (Data In)	Purple
Audio Right	White
Audio Common	Green
Audio Left	Brown

aera 795/796 Aviation Bare Wire Connections

N687MS RV-S8-
DWG14
Garmin 796 &
GDL 39
Mike Stewart
Last Edit date 10/22/15

Connector A Description

Mating Connector: 25-pin Female D-sub (Instrument ha

Pin	Function
1	Serial Out 6 – RS232 Altitude Encoder Output *
2	Serial Out 1 – Spare – Also connects to expansion port for ARINC 429 or internal GPS* (Available if expansion port not used.)
3	Serial Out 5 – RS232 Autopilot Serial Data Output (Emulates NMEA0183)*
4	Serial Out 2 – RS232 – Primary AHRS Output Data
5	Serial Out 4 – RS232 Out – Spare*
6	Localizer Deviation + Left Input
7	Localizer Deviation + Right Input
8	Glideslope Deviation + Down Input
9	Glideslope Deviation + Up Input
10	Localizer Valid – Input
11	Localizer Valid + Input
12	Glideslope Valid – Input
13	Glideslope Valid + Input
14	Primary Power Input
15	Secondary Power Input
16	Third Power Input
17	Ground
18	+12-40V Clock Power – Connect to aircraft power via a 0.1 amp inline fuse or 10k ohm resistor
19	Serial Input 2 – RS232 Primary AHRS Input*
20	Serial Input 1 – Spare – Also connects to expansion port for ARINC 429 or internal GPS* (Available if expansion port not used.)
21	Serial Input 4 – RS232 EIS Engine Monitor Serial Data Input*
22	Serial Input 5 – RS232 GPS Data In (NMEA0183 or UPS CNX80 Format) *
23	Serial Input 3 – RS232 Inter-Display Unit Input
24	Serial Input 6 – RS232 Input – Spare – Secondary AHRS Input (Future Growth for weather or traffic.)
25	Serial Out 3 –.RS232 Inter-Display Unit Output

Connector B Description

Mating Connector: 25-pin Male D-sub (Instrument has 25-pin Female D-sub)

Pin	Function
25	Audio Ground
24	Audio Output – Connect to Intercom Auxiliary Input
23	Serial 7 Input
22	Serial 7 Output
21	Analog Input 1 – ILS Tuned Input
20	Analog Input 2 –NAV/GPS Flag In
19	Analog Input 3 – VOR/ILS Deviations Active
18	Analog Input 4 – GPS Hold/Sequence In
17	Analog Input 5
16	Analog Input 6
15	Analog Input 7
14	Analog Input 8
13	Discrete Output 6**
12	Discrete Output 5**
11	Discrete Output 4**
10	Discrete Output 3**
9	Discrete Output 2**
8	Discrete Output 1**
7	Serial 8 Input
6	Serial 8 Output
5	RS-422 Serial 1 Output - B
4	RS-422 Serial 1 Output - A
3	RS-422 Serial 1 Input - B
2	RS-422 Serial 1 Input - A
1	Warning Light Output - Open/Ground – Ground = Warning Light On

** These outputs are open/ground, max input voltage = 50V, max sink current per input = 0.5 amp for any one input, 2.0 amps total for all of these discrete inputs combined.

N687MS RV-S8-DWG15
GRT EFIS & Wx.
Mike Stewart
Last Edit date 10/22/15

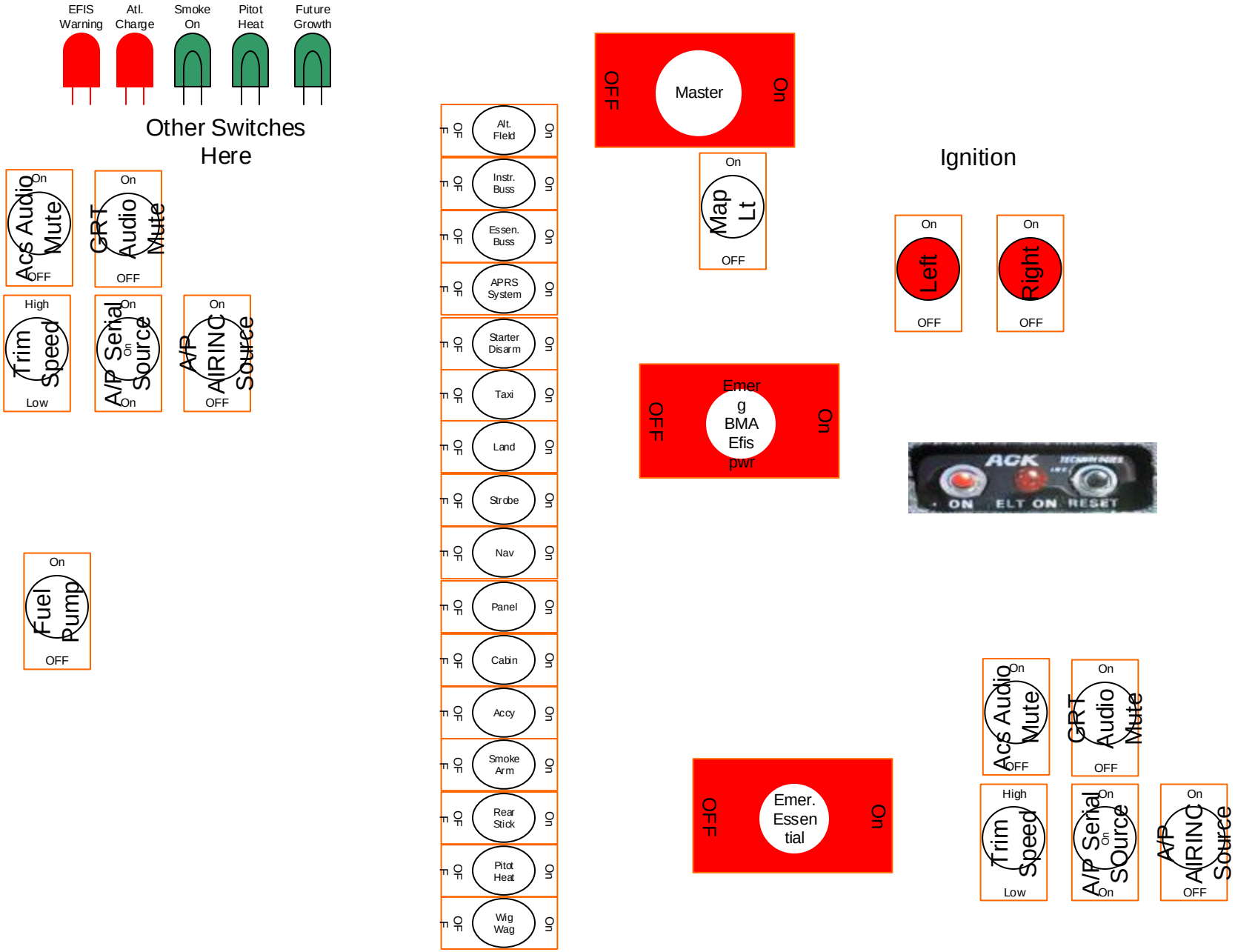

N687MS RV-S8-DWG16
Switches & Annun
Mike Stewart
Last Edit date 10/22/15

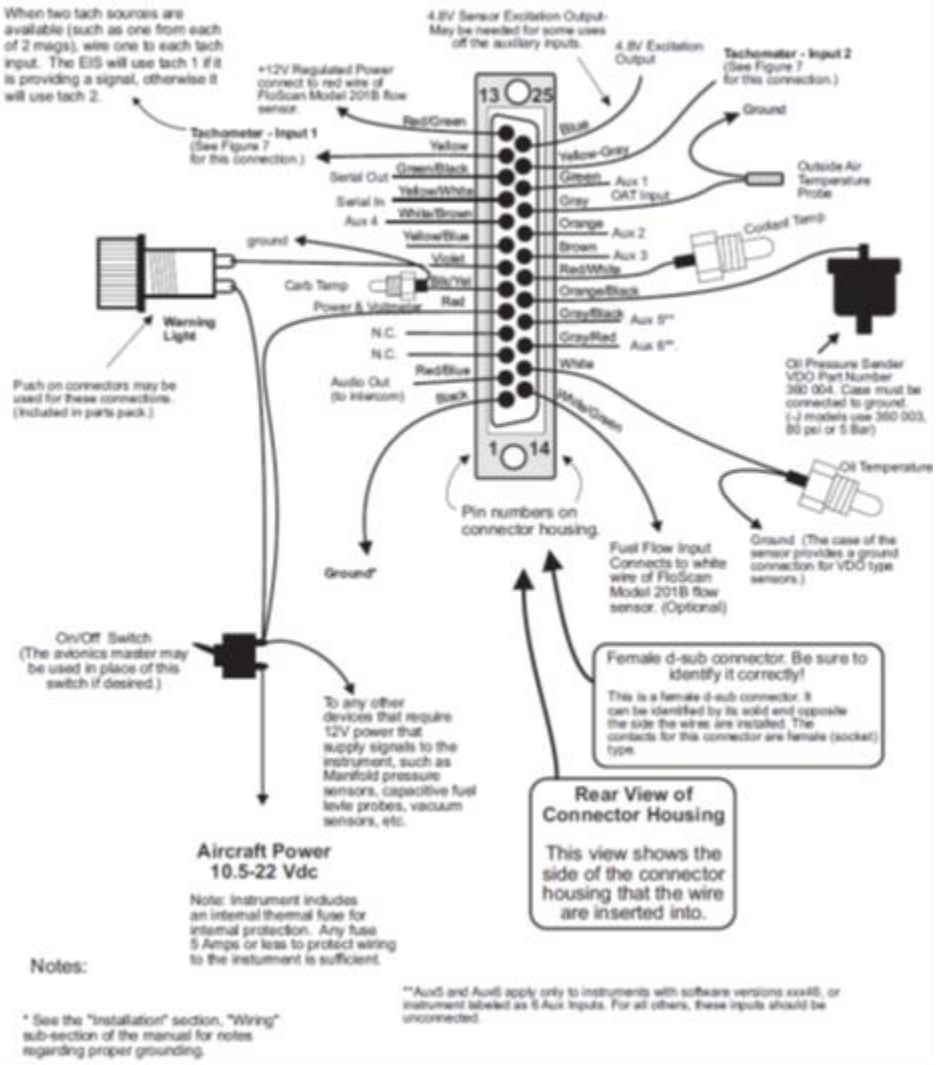

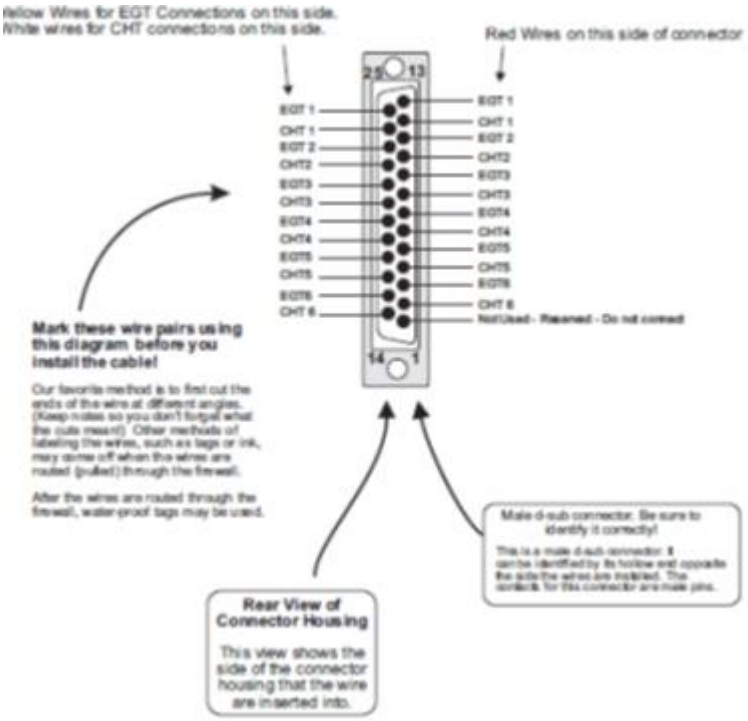

N687MS RV-S8-
DWG17A
GRT EIS
Mike Stewart
Last Edit date 10/22/15

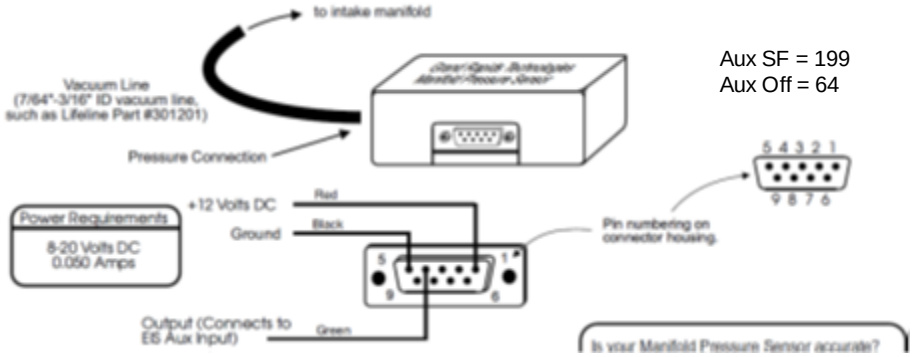

Aux SF = 199
Aux Off = 64

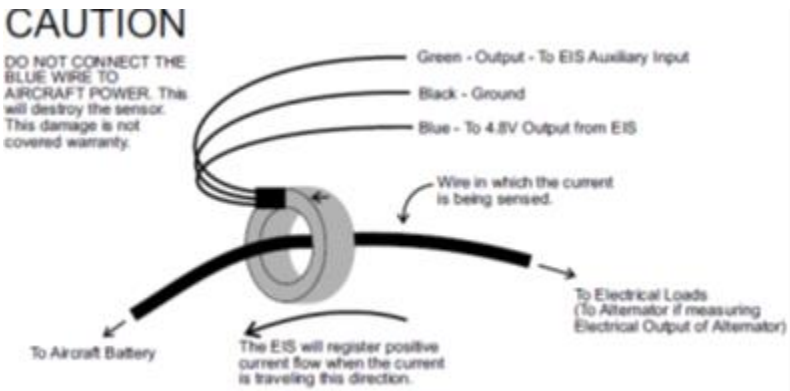

For sensing current in the -100 to 100 Amp range, or -50 to +50 Amp range, an auxiliary input which does not include a decimal point in the display is the best choice, as the displayed value will have a resolution of 1 Amp.

For Sensing -100 to +100 Amps: (See note 1 below.)

Set the Forward/Reverse Sensing to FORWARD
Set the Auxiliary Scale Factor to 164.
Set the Auxiliary Offset to 313.

Aux Inputs
1 Man Pressure
2 Fuel Pressure
3 Tank 1 Left
4 Tank 2 Right
5 Amps

Man Pressure Sensor
AuxSF = 199
AuxOff = 64

Fuel Pressure
AuxSF = 59
AuxOff = 5

Note Red Cube
Wiring FT-60
Red-Wht/Or-+12v
Blk-wht-Common
Wht-Wht/Bl-FF
signal

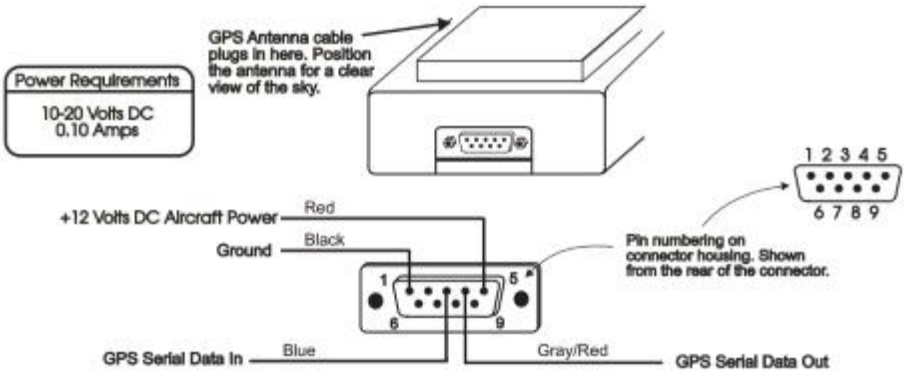

Notes:

1. Mount the GPS Module to avoid water, fuel, and extreme heat.
2. Turn off power to the module adapter when not in use to avoid discharging the aircraft's battery.
3. Wiring is shown to the connector that plugs into the adapter.
4. Current Draw is less than 0.1 amp. Power should be supplied to the unit through a breaker of 5 amps or less. It is acceptable to share a breaker with this and other equipment, provided that if the breaker opens, the loss of the equipment powered by that breaker does not cause an issue with the safety of flight.

Configuring the EFIS

1. Using the Set Menu, "General Setup" pages, configure the serial port that has been wired to the GPS module to "NMEA0183 GPS".
2. Set the baud rate to 57600.
3. The serial output from the EFIS to the GPS must be connected, as well as the serial input.
4. Verify the Serial Port counter is incrementing. If this counter is not changing, serial data is not being received at the EFIS, and the wiring should be checked.
5. Use the "Display Unit Maintenance" page, and select "GPS Status" to observe if the GPS is able to receive satellite data. Initial position lock may take 10-20 minutes.

External GPS RAIM Module
GRT Avionics, Inc.

GPS RAIM -External Module Rev B.cdr
Rev A

N687MS RV-S8-
DWG17A
GRT EIS&GPS
Mike Stewart
Last Edit date 10/22/15

Magnetometer DB9 Pin No.	Mini DB15 Pin No.	Use	Color
	1	Serial 2 Out	YEL
	2	Serial 2 In	YEL/WHT
	3	Trig TT22 A	
	4	Trig TT22 B	
	5	Serial 1 Out	GRN
	6	Serial 1 In	WHT/GRN
	7	Ground	BLK
	8	Power in: 8-30V	RED
Mag 8	9	Mag A/Serial 3 Out	ORG
Mag 9 (serial out)	10	Mag B/Serial 3 In	ORG/BLK
Mag 5	11	Mag C	BLU
Mag 1	12	Mag D	WHT/BLU
	13	Future Use	
	14	Future Use	
	15	OAT	GRY

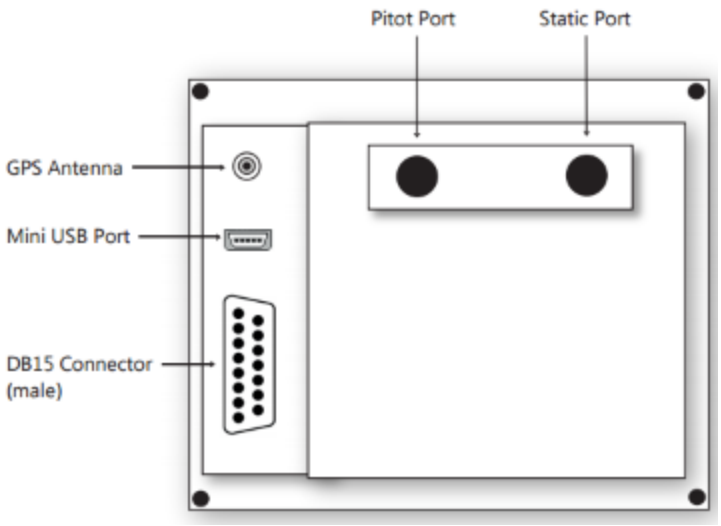

Note:
Serial 1 is the interconnect to the GRT HXr. Magnotometer is mounted in the right wingtip. Color codes on the mini for the magnotometer are: Pin 9 Brn, Pin 10 Gry/Or, pin 11 Wht/Grn?, pin 12 Wht/Bl

N687MS RV-S8-DWG18
GRT Mini-X
Mike Stewart
Last Edit date 10/22/15

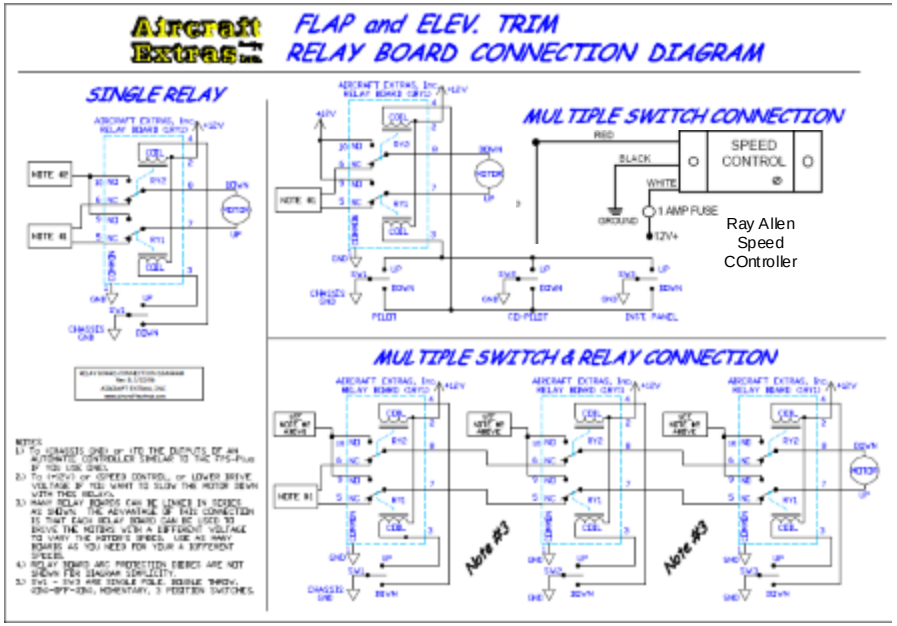

Elev & Ail. Trim Pins on trim board
1. Gnd
2. +12Input
3 sw up
4. sw down
5. gnd
6. gnd
7. servo mtr
8. servo mtr
9. +x from speed controller red
10. +x from speed controller red

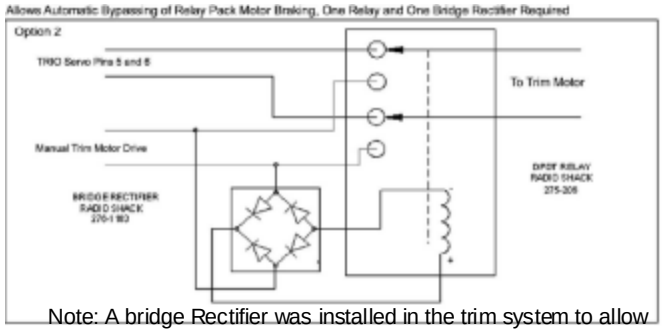

Note: A bridge Rectifier was installed in the trim system to allow for Trio AP to control pitch trim. Wired similar to above, purpose is to allow either stick trim control or Trio to do it. Wired so if the relay fails, stick should have control. In diagram above, Replace swap words manual and trio on the left side. This is under pilot seat on relay deck.

Used Rat Shack 275-0206 relay and 276-1152 rectifier

12 Pin Connector relay bridge __
Pin #1 To trim motor _____
Pin #2 To trim motor _____
Pin #3 To manual trim relay ____
Pin #4 To manual trim relay ____
Pin #5 To trio servo _____.
Pin #6To trio Servo _____
Pin #7-12 N/U _____

Bosch 0 332 019 155 Relay

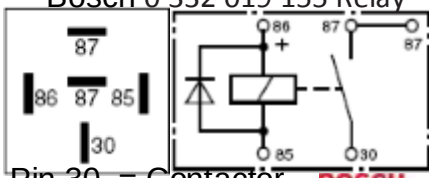

Pin 30 = Contactor
Pin 86 = Relay Coil +12
Pin 85 = Relay coil Gnd -
Pins 87 = Load
Note: BMA OAT in rt w
spar wired to 4cdtr shielded.
Red - wht/or, Blk - wht, Yellow - Wht/bl, why/gn not used.
GRT OAT in rt wing fwd of spar
ACS OAT in left wing root fwd of spar

Typical High Capacity relay with mounting bracket.

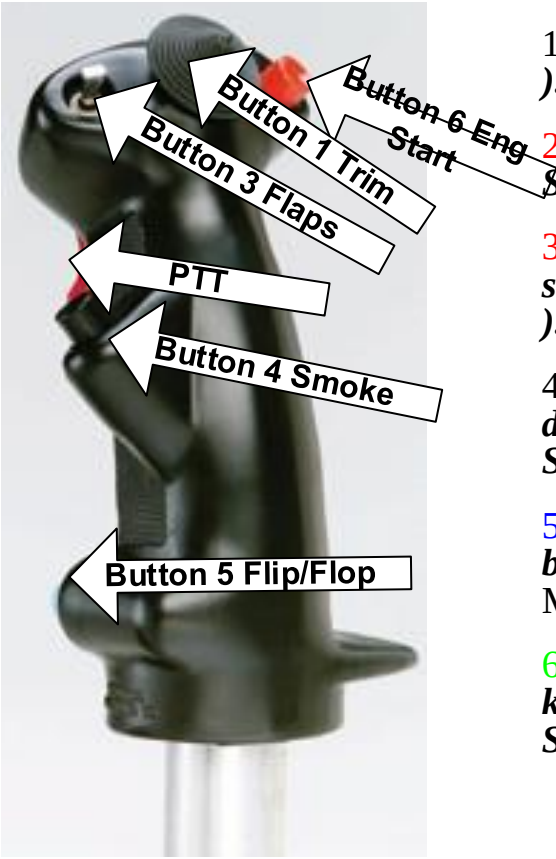

1) ***Two-Axis (thumb operated) Trim Switch (N.O. SPST):*** Pitch & Aileron;

2) ***Red (index finger operated) Trigger Switch (N.O. SPDT):*** Push-To-Talk (PTT);

3) ***Red (thumb operated) Tactical Pushbutton on thumb side of the China Hat (N.O., N.C or ON/OFF SPDT):toggle,*** Flaps, MO, Off, MO

4) ***Black Tactical (thumb operated) Push-button half way down the grip (thumb) side (N.O., N.C or ON/OFF SPDT):*** Smoke, Push on/Push off

5) ***Blue Tactical (pinky finger operated) bottom Push-button (N.O., N.C or ON/OFF SPDT):*** Start, SPST NO, MO

6) ***Green (thumb operated) Tactical Push-button on knuckle side of the China Hat (N.O., N.C or ON/OFF SPDT): FlipFlop, SPST NO MO***

N687MS RV-S8-DWG21
Stick/Trim
Mike Stewart
Last Edit date 10/22/15

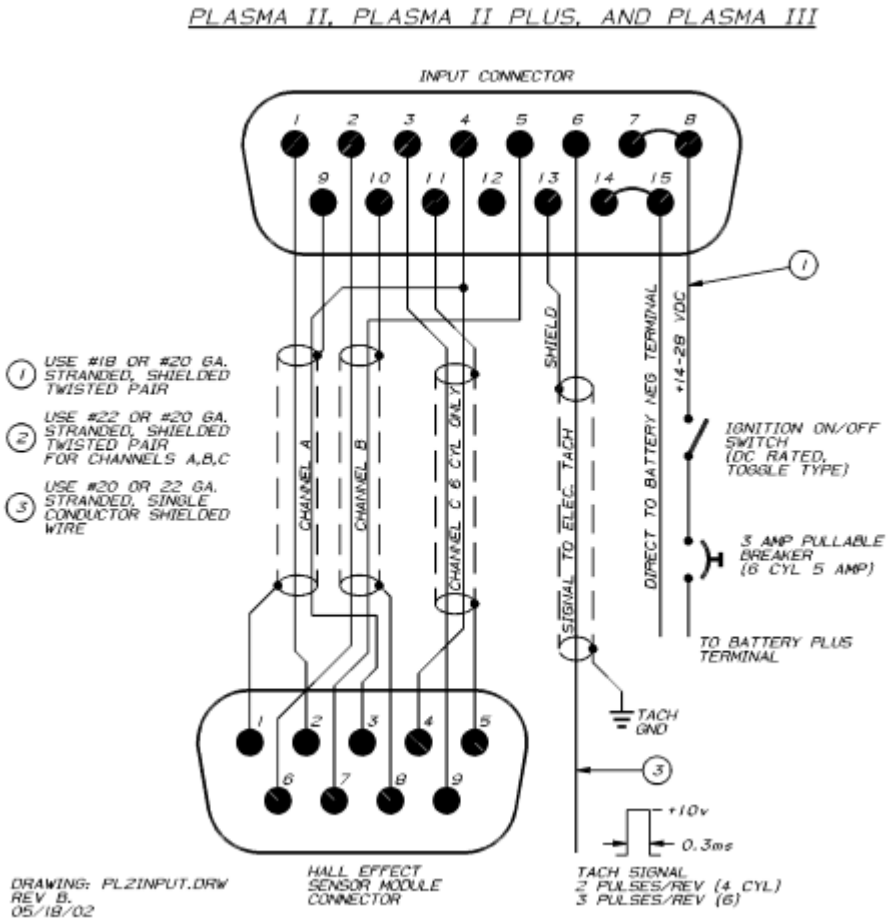

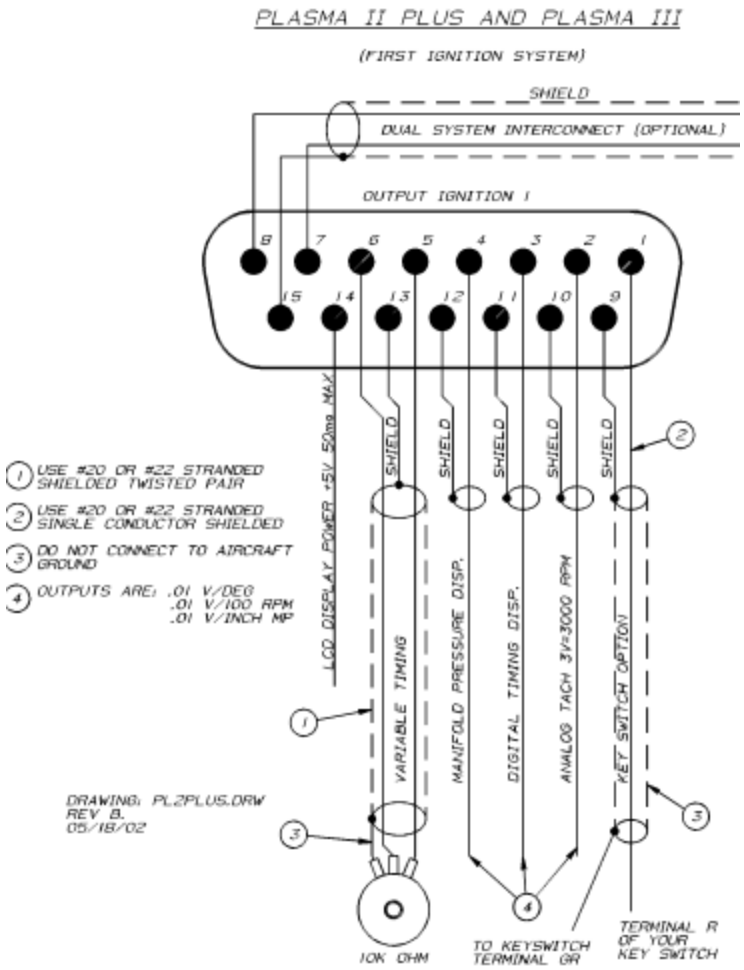

Dual Plasma III installs with box interconnect and direct crank pickup.
Power from hot side of master up to ign switches on panel. In-line fuses just before ign switches. Means IGN switches are ALWAYS HOT! A test harness was built for testing. Behind panel, upper right side . See DWG 23 for test harness pinout 12pin connector. RPM output goes to an ACS device mounted on FW, aft, slightly left and mid high. Then from there goes to the ACS box mounted on the baggage floor. Left ign switch is for bottom plus, rt is for top plugs.

N687MS RV-S8-
DWG22
Ignition
Mike Stewart
Last Edit date 10/22/15

15 Pin SW Panel Line In _____

1	4	7	10	13
2	5	8	11	14
3	6	9	12	15

Pin #1 Alt Field _____
Pin #2 Starter Disarm _____
Pin #3 Landing Lts _____
Pin #4 Strobe Lts _____
Pin #5 Nav Lts _____
Pin #6 Smoke Arm _____
Pin #7 Panel Lts _____
Pin #8 Cabin Lts _____
Pin #9 Accy _____
Pin #10 Taxi +12 _____
Pin #11 Bluetooth Relay _____
Pin #12 _____
Pin #13 Pitot Heat _____
Pin #14 APRS _____
Pin #15 Gnd to term block _____

15 Pin SW Panel Loads Out ___

1	4	7	10	13
2	5	8	11	14
3	6	9	12	15

Pin #1 Alt Field _____
Pin #2 Instr. Buss sw gnd _____
Pin #3 Essen Buss sw gnd _____
Pin #4 Starter disarm _____
Pin #5 Strobes _____
Pin #6 Nav _____
Pin #7 Smoke Arm _____
Pin #8 Panel Lts _____
Pin #9 Cabin Lts _____
Pin #10 Accy _____
Pin #11 Rear Seat disarm _____
Pin #12 Rt. Landing Lt. _____
Pin #13 Left Taxi lt _____
Pin #14 Pitot _____
Pin #15 APRS to left wing _____

15 Pin Panel Dimmer _____

1	4	7	10	13
2	5	8	11	14
3	6	9	12	15

Pin #1 Out 1 _____
Pin #2 Out 2 _____
Pin #3 Out 3 _____
Pin #4 Out 4 _____
Pin #5 CH 4 _____
Pin #6 CH 3 _____
Pin #7 CH 2 _____
Pin #8 CH 1 _____
Pin #9 5V _____
Pin #10 Gnd _____
Pin #11 Trk _____
Pin #12 +12 _____
Pin #13 _____
Pin #14 _____
Pin #15 _____

12 Pin Trim Relays Relay Deck _

1	4	7	10
2	5	8	11
3	6	9	12

Pin #1 Spd Ctl blk _____
Pin #2 Ail Org rt trim _____
Pin #3 All Trim Relays +12 _____
Pin #4 Elev grn dn _____
Pin #5 Elev Org up _____
Pin #6 Ail Grn left _____
Pin #7 Elev Why _____
Pin #8 Elev Wht _____
Pin #9 Ail Wht _____
Pin #10 Ail Wht _____
Pin #11 Plt Stk Gnd To Rly Dek
Pin #12 Relay Deck Gnd _____

3 pin Switch Panel _____

1	2	3

Pin #1 BT +12 out __
Pin #2 Smk Relay In +12
Pin #3 Smk Sol. Out +12 _

6 Pin BT Relay Board _____

1	2	3
4	5	6

Pin #1 +12 in from sw _____
Pin #2 +12 relay to sol _____
Pin #3 +12 fm smk relay NC ___
Pin #4 _____
Pin #5 _____
Pin #6 Aircraft Gnd _____

4 pin Relay Deck _____

1	2	3	4

Pin #1 to Pitch Trm Srvo fm sw _
Pin #2 to Pitch Trm Srvo fm sw _
Pin #3 to a/p pitch srvo fm sw __
Pin #4 to a/p pitch srvo fm sw __

15 Pin Relays Relay Deck _____

1	4	7	10	13
2	5	8	11	14
3	6	9	12	15

Pin #1 Smk Ctr&coil +12 _____
Pin #2 Smoke Load pump&sol _
Pin #3 Smk Gnd Switched _____
Pin #4 Flaps V+ _____
Pin #5 Flp Btn _____
Pin #6 Flp Btn _____
Pin #7 Flp Mtr + _____
Pin #8 Flp Mtr - _____
Pin #9 _____
Pin #10 WW +12 Not used ____
Pin #11 _____
Pin #12 _____
Pin #13 _____
Pin #14 _____
Pin #15 GND for entire tray ____

N687MS RV-S8- DWG23
Switches, relays, Stick
Mike Stewart
Last Edit date 10/22/15

15 Pin Pilot Stick _____

1	4	7	10	13
2	5	8	11	14
3	6	9	12	15

Note:
First Clor is stick wire, second color is wire color away from stick
Other gnds from stick btns are wired to pin 15. wht.blt for ptt, black for trim, black for flaps, blk for smoke, blue/bk for flipflop

Pin #1 Pitch Dn Brn - Brn _____
Pin #2 Roll rt Grn - Grn _____
Pin #3 Roll left Red - Org _____
Pin #4 Pitch Up Blue - Blue ____
Pin #5 PTT Wht - Yel _____
Pin #6 Flps up Rd/Blk - Yel ____
Pin #7 Flp dn Red - Red _____
Pin #8 Smoke Blk/Wht - Wht ___
Pin #9 Com Swap Bl/Bk Yel ____
Pin #10 Starter in Grn/Blk - Red _
Pin #11 Starter Out Grn - Red __
Pin #12 _____
Pin #13 _____
Pin #14 _____
Pin #15 Stick Gnd _____

6 Pin pass stick _____

1	2	3
4	5	6

Note: Wires from servo's pass through the relay deck area heading for the indicators on the EFIS.

Pin #1 Pitch Dn Blue _____
Pin #2 Pitch up Grn _____
Pin #3 Roll rt yellow _____
Pin #4 Roll left red _____
Pin #5 PTT orange _____
Pin #6 stk gnd to sw panel _____

9 Pin Trim indicator @ relay tray

1	4	7
2	5	8
3	6	9

Pin #1 Ail Blue - Or _____
Pin #2 Ail Gr - Yellow _____
Pin #3 Ail Red - red _____
Pin #4 Elev Blue - Or _____
Pin #5 Elev Gr - Yellow _____
Pin #6 Elev Red - Red _____
Pin #7 _____
Pin #8 _____
Pin #9 _____

12 Pin Ignition Test Plus _____

1	4	7	10
2	5	8	11
3	6	9	12

Pin #1 RMP Rt + _____
Pin #2 RMP Rt - _____
Pin #3 Timing Left + _____
Pin #4 Timing Rt + _____
Pin #5 Timing Rt - _____
Pin #6 Timing Left _ _____
Pin #7 MP Rt. + _____
Pin #8 MP Rt. - _____
Pin #9 MP Left + _____
Pin #10 RPM Left + _____
Pin #11 RPM Left - _____
Pin #12Mp Left - _____

12 Pin Instr Pnl Sw Left Side ___

1	4	7	10
2	5	8	11
3	6	9	12

Pin #1 Trm Spd Gnd _____
Pin #2 Trm Spd to Controller ___
Pin #3 AP Servo SW +12In ____
Pin #4 AP Servo SW +12 Out ___
Pin #5 Serial from BMA _____
Pin #6 GRT Audio in _____
Pin #7 GRT aud out to Aud Pnl _
Pin #8 EIS Audio In _____
Pin #9 EIS Aud out to Aud Pnl ___
Pin #10 Serial frm 430 _____
Pin #11 A/P Eng/Dis gnd in ____
Pin #12 A/P Eng/Dis GndOut ___

12 Pin Eng Connector firewall __

1	4	7	10
2	5	8	11
3	6	9	12

Pin #1 _____
Pin #2 _____
Pin #3 _____
Pin #4 _____
Pin #5 _____
Pin #6 Shields All _____
Pin #7 Smoke +12 solenoid on _
Pin #8 Alt. Warn pull gnd wht/or _
Pin #9 Gnd Any use _____
Pin #10 Alt field +12 wht/bl ____
Pin #11 _____
Pin #12 _____

5 pin connector Pitch Servo ____

1	2	3	4	5

Pin #1 red +12 _____
Pin #2 Wht Serial In _____
Pin #3 Yel Eng/Dis _____
Pin #4 Grn MultiPlex Out _____
Pin #5 _____

4 pin Roll Servo _____

1	2	3	4

Pin #1 red +12 _____
Pin #2 Wht Serial In _____
Pin #3 Yel Eng/Dis _____
Pin #4 Grn MultiPlex Out _____

5 pin 796 Sound sw _____

1	2	3	4	5

Pin #1 Left in wht/or _____
Pin #2 Rt in wh/blu _____
Pin #3 L out to music input jack _
Pin #4 R out to music input jack _
Pin #5 _____

6 Pin EIS Sensor Signals _____

1	2	3
4	5	6

Pin #1 Oil Temp _____
Pin #2 MP Aux 1 _____
Pin #3 FuelP Aux 2 _____
Pin #4 Amps Aux 5 _____
Pin #5 Oil Press _____
Pin #6 Fuel FLow _____

12 Pin Panel Annun. Lights ____

1	4	7	10
2	5	8	11
3	6	9	12

Pin #1 Alt. Warn, Pull gnd ____
Pin #2 All Lts +12 (if required) _
Pin #3 gnd ALL _____
Pin #4 +12 Pitot Heat _____
Pin #5 Com 1 Pull - _____
Pin #6Com 2 Pull - _____
Pin #7 GRT Warn pull gnd ____
Pin #8 _____
Pin #9 Smoke On +12 _____
Pin #10 _____
Pin #11 _____
Pin #12 _____

6 Pin AIRINC Switch _____

1	2	3
4	5	6

Pin #1 AIRINC A IN 430 _____
Pin #2 AIRINC B IN GRT _____
Pin #3 AIRINC B OUT to a/p ___
Pin #4 AIRINC B IN 430 _____
Pin #5 AIRINC A IN GRT _____
Pin #6 AIRINC A OUT to a/p ___

5 Pin Panel Maplite _____

1	2	3	4	5

Pin #1 Maplite +12 _____
Pin #2 VSI lt +12 _____
Pin #3 All gnd _____
Pin #4 _____
Pin #5 _____

N687MS RV-S8- DWG24A
Instruments and Panel
Mike Stewart
Last Edit date 10/22/15

12 Pin EIS A _____

1	4	7	10
2	5	8	11
3	6	9	12

Pin #1 +12 In _____
Pin #2 Gnd In _____
Pin #3 Trim Pos Gnd _____
Pin #4 Aileron +5 1kresist _____
Pin #5 Elev +5 1kresist _____
Pin #6 Left Tank Signal _____
Pin #7 Right Tank Signal _____
Pin #8 Audio Out _____
Pin #9 EIS WarningLt violet ____
Pin #10 EIS Serial In Yel/Wht ___
Pin #11 EIS Serial out Grn/Blk __
Pin #12 _____

12 Pin EIS B _____

1	4	7	10
2	5	8	11
3	6	9	12

Pin #1 +5v Regulated Amps ___
Pin #2 +5v Regulated _____
Pin #3 +5v Regulated _____
Pin #4 +5v Regulated _____
Pin #5 +5v Reg FP 300ohmres _
Pin #6 +12V Regulated ManP ___
Pin #7 +12V Regulated FuelFl __
Pin #8 +12V Reg Fuel Cap L ___
Pin #9 +12V Reg Fuel Cap R ___
Pin #10 +12V Regulated _____
Pin #11 +12V Regulated _____
Pin #12+12V Regulated _____

12 Pin EIS C _____

1	4	7	10
2	5	8	11
3	6	9	12

Pin #1 Gnd Oil Temp _____
Pin #2 Gnd Man Press _____
Pin #3 Gnd Amps _____
Pin #4 Gnd Fuel Flow Shield ___
Pin #5 Gnd FF common _____
Pin #6 Gnd _____
Pin #7 Gnd _____
Pin #8 Gnd _____
Pin #9 _____
Pin #10 _____
Pin #11 _____
Pin #12 _____

5 pin Map Light _____

1	2	3	4	5

Pin #1 _____
Pin #2 _____
Pin #3 _____
Pin #4 _____
Pin #5 _____

12 Pin RT wingtip _____

1	4	7	10
2	5	8	11
3	6	9	12

Pin #1 Strobe wht _____
Pin #2 Strobe red _____
Pin #3 Strobe Blk _____
Pin #4 Landing +12 _____
Pin #5 Nav +12 _____
Pin #6,7,8,9 Gnd _____
Pin #10 Strobe +12 _____
Pin #11 Nav +12 _____
Pin #12 Sync _____

12 Pin 796/GDL39 Behind Panel
Right side

1	4	7	10
2	5	8	11
3	6	9	12

Pin #1 +12 796 _____
Pin #2 +12 GDL39 _____
Pin #3 Gnd 796 _____
Pin #4 Gnd GDL39 _____
Pin #5 Audio L Tip Wht/Or _____
Pin #6 Audio R Ring Wht/Bl _____
Pin #7 Audio Base Gnd Wht _____
Pin #8 796 Tx1 Out to GDL39 wht _____
Pin #9 796 Tx In to GDL 39 grn _____
Pin #10 796 TX2 Out to GRT S2 _____
Pin #11 796 Tx2 In to GRT S2 _____
Pin #12 _____

N687MS RV-S8- DWG24B
Wings and Tail
Mike Stewart
Last Edit date 10/22/15

12 Pin Left wingtip _____

1	4	7	10
2	5	8	11
3	6	9	12

Pin #1 Strobe wht Not used _____
Pin #2 Strobe red Not used _____
Pin #3 Strobe Blk Not used _____
Pin #4 Taxi +12 _____
Pin #5 Nav +12 _____
Pin #6,7,8,9 Gnd _____
Pin #10 Strobe +12 _____
Pin #11 Nav +12 _____
Pin #12 Sync _____

12 Pin Left Wing Root _____

1	4	7	10
2	5	8	11
3	6	9	12

Pin #1 Strobe blk _____
Pin #2 Strobe Wht _____
Pin #3 Strobe Red _____
Pin #4 Nav lts +12 _____
Pin #5 Left Taxi Light +12 _____
Pin #6 strobe shield _____
Pin #7 wingtip gnd supply _____
Pin #8 APRS +12 _____
Pin #9-12 unused _____

12 Pin RT wing root _____

1	4	7	10
2	5	8	11
3	6	9	12

Pin #1 Strobe blk _____
Pin #2 Strobe Wht _____
Pin #3 Strobe Red _____
Pin #4 Nav lts +12 _____
Pin #5 Rt wing Landing lt +12 _____
Pin #6 strobe Shield Gnd _____
Pin #7 Pitot Heat +12 _____
Pin #8 _____
Pin #9 Wingtip Gnd Supply _____

6 Pin Rt wing root roll servo _____

1	2	3
4	5	6

Pin #1 Orange _____
Pin #2 Green _____
Pin #3 Blue _____
Pin #4 Wht _____
Pin #5 Shield _____
Pin #6 _____

15 Pin Tail Conn _____

1	4	7	10	13
2	5	8	11	14
3	6	9	12	15

Pin #1 Elev Or _____
Pin #2 Elev Gr _____
Pin #3 Elev Bl _____
Pin #4 Elev wht _____
Pin #5 Elev Wht _____
Pin #6 Pos Lt +12 _____
Pin #7 Rud Or _____
Pin #8 Rud Gr _____
Pin #9 Rud Bl _____
Pin #10 Rud Wht _____
Pin #11 Rud Wht _____
Pin #12 Strobe Blk _____
Pin #13 Strobe Red _____
Pin #14 Strobe Wht _____
Pin #15 Aircraft gnd _____

5 pin bma mag rt wing root _____

1	2	3	4	5

Pin #1 wht/or +12 _____
Pin #2 wht gnd _____
Pin #3 wht/bl Serial C tx _____
Pin #4 wht/gr serial c rx _____
Pin #5 shield _____

9 Pin Rt Wing GRT Mag _____

1	4	7
2	5	8
3	6	9

Pin #1 wht/or Mag Pwr P22 _____
Pin #2 blk mag gnd P14 _____
Pin #3 wht/grn mag x input p9 _____
Pin #4 Wht/Bl mag ctl out p18 _____
Pin #5 wht/brn mag y in p8 _____
Pin #6 wht mag z in p7 _____
Pin #7 _____
Pin #8 _____
Pin #9 _____

4 pin APRS Left Wingtip _____

1	2	3	4

Pin #1 +5v APRS pin 4 to GPS +5 _____
Pin #2 Gnd APRS pin5 to GPS & somputer GND _____
Pin #3 APRS Pin 2 serial Data in from jack pin2 _____
Pin #4 APRS Serial out to Jack Pin 5 _____

12 Pin AP Behind Panel _____

1	4	7	10
2	5	8	11
3	6	9	12

Pin #1 +12 Roll _____
Pin #2 GRT S7Out 2 Sev In Wht _____
Pin #3 Eng/Dis to AP Yellow _____
Pin #4 GRT S7 In Brn to AP SevOut Grn _____
Pin #5 Shield Gnd _____
Pin #6 +12 Pitch _____
Pin #7 GRT S7Out 2 Sev In Wht _____
Pin #8 Eng/Dis to AP Yellow _____
Pin #9 GRT S7 In Brn to AP SevOut Grn _____
Pin #10 Shield Gnd _____
Pin #11 Gnd Spare _____
Pin #12 _____

Pin 1 No connection
Pin 2 Serial Data In (GPS and programming)
Pin 3 Serial Data Out
Pin 4 + 5 Regulated output (optional for GPS power)
Pin 5 Ground

Note. Serial plug cut off the GPS puck to use bare wires.
Pin2 Green Serial out
Pin3 white serail in N/A
Pin 4 red +5 in
Pin 5 blk gnd

Byonics GPS1 - Requires 5 volts DC. Pinout: 2 - Serial Out, 3 - Serial In (not normally used), 4 - 5V Power in, 5 - Ground. Sends NMEA sentences: Top Surface DB connections. Pin 1 No connectionPin 2 Serial Data In (GPS and programming)Pin 3 Serial Data Out
Pin 4 + 5 Regulated output (optional for GPS power)
Pin 5 Ground

Computer Serial Cable Wiring

DB9	1/8"jackmale
Pin 5 wht/grn	Base
Pin 2 wht/or	Center
Pin 3 Or	Tip

Note that 2 and 3 are crossed.

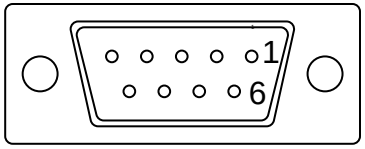

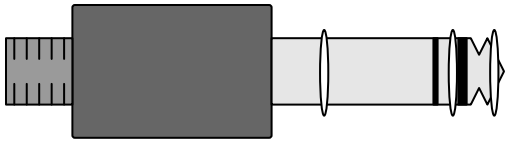

Computer 9pin db to 1/8" stereo for programming tracker
Pin2 to center, Pin3 to tip, Pin 5 to base

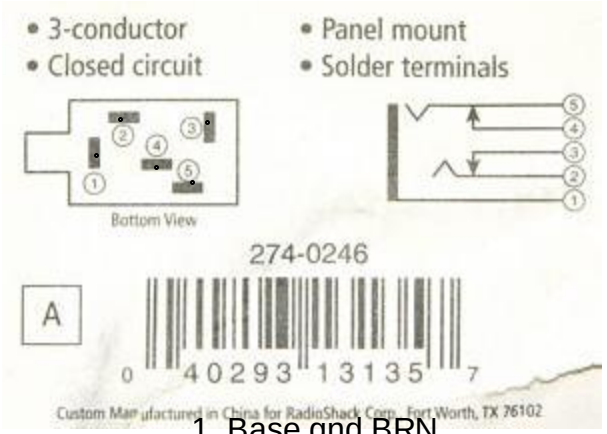

1/8" stereo plug male
Base serial gnd
Ctr serial into computer
Tip serial out from computer

1. Base gnd BRN
2. tip out to tracker pin 2 whtor
3. tip in from gps serial out Or
4. Not used ctr IN
5. Ctr conductor out to tracker pin 3 wht/grn

N687MS RV-S8- DWG25
Automatic Position Reporting Sys.
Mike Stewart
Last Edit date 10/22/15

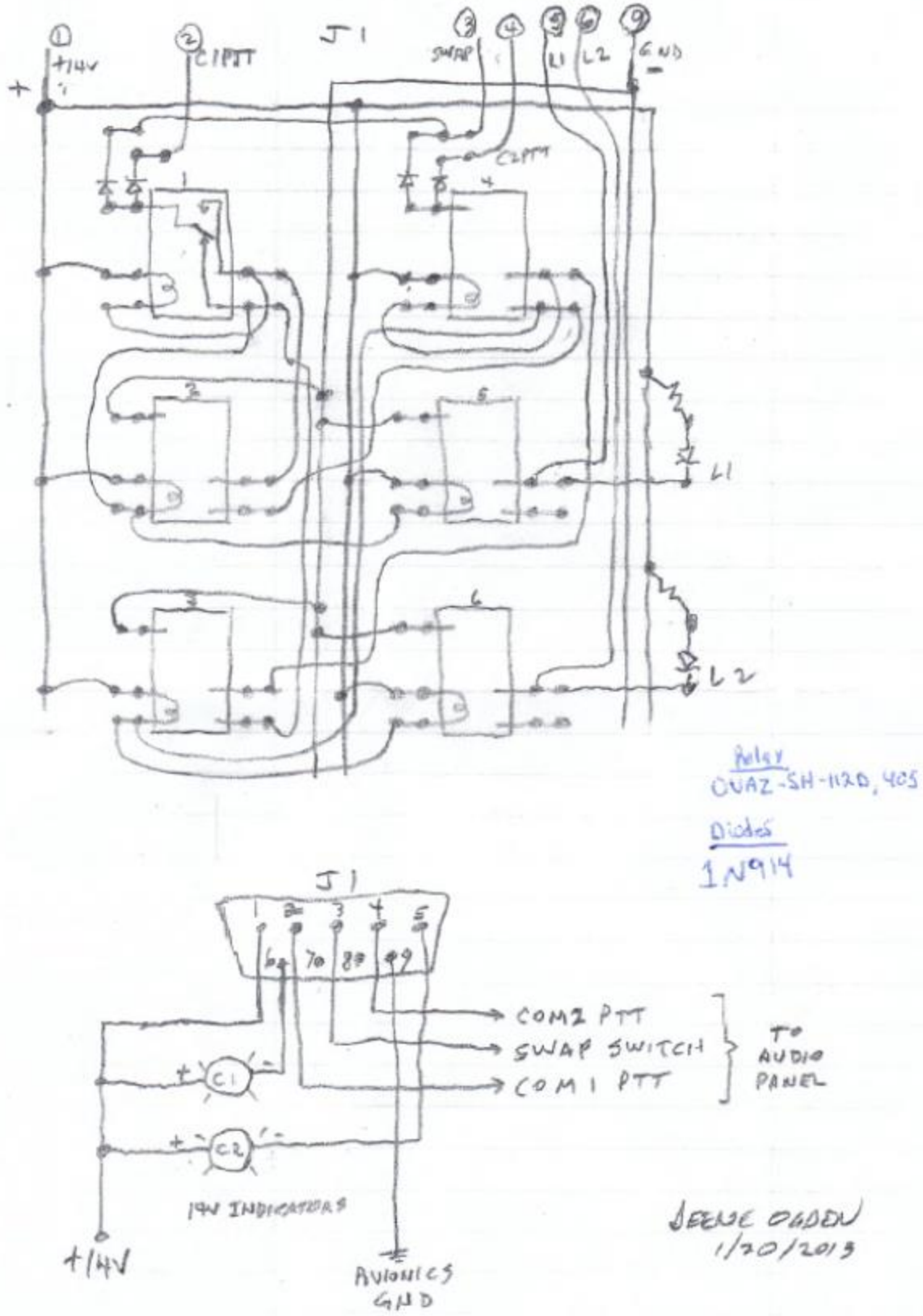

N687MS RV-S8- DWG26
ComSwapBoard
Mike Stewart
Last Edit date 10/22/15

This is located behind the panel, attached
To the AHARS. It's a black box ~3"x5". Its job is to
provide active com indication on the panel vial lights

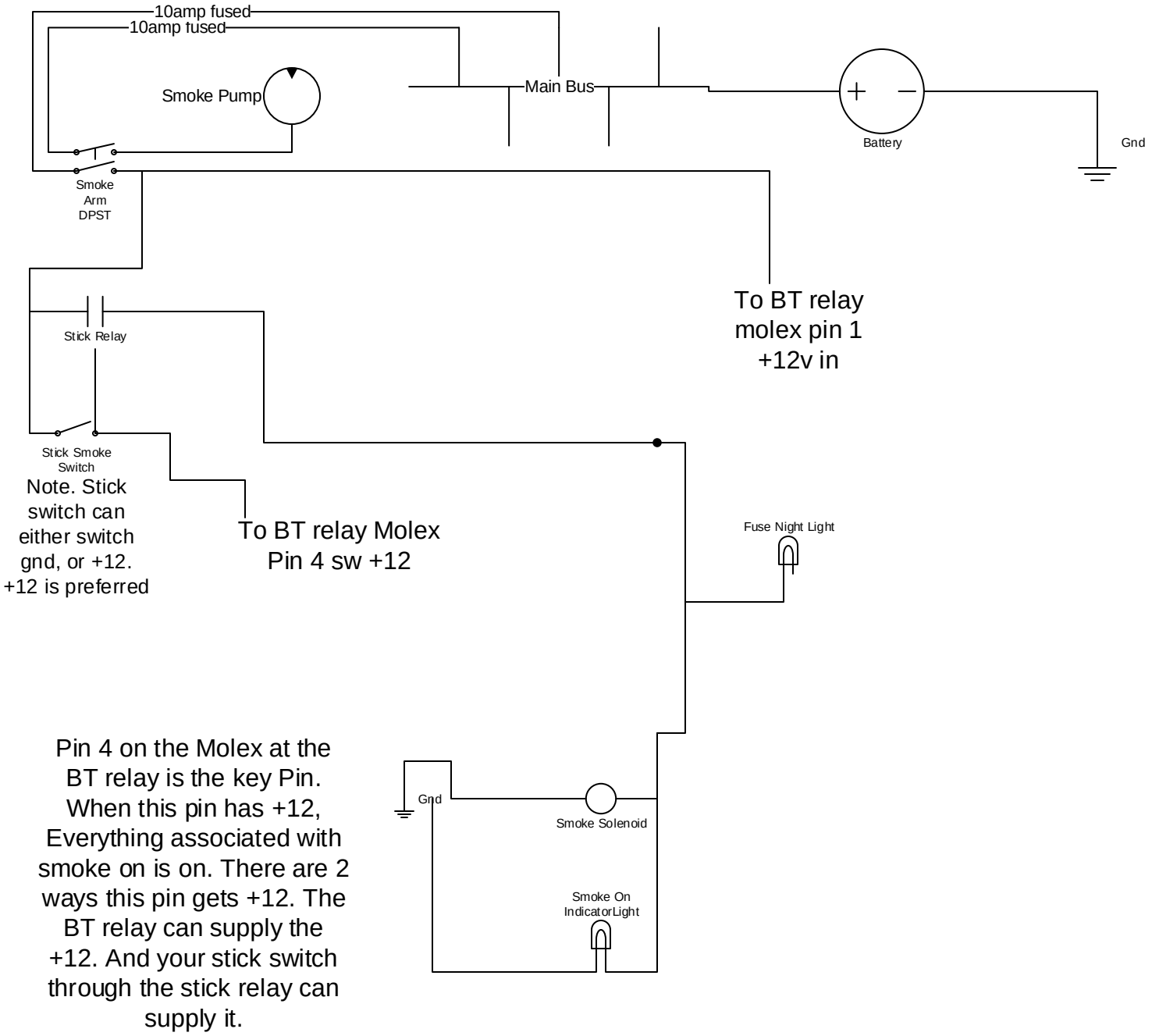

N687MS RV-S8- DWG28
Smoke Ststem
Mike Stewart
Last Edit date 10/22/15

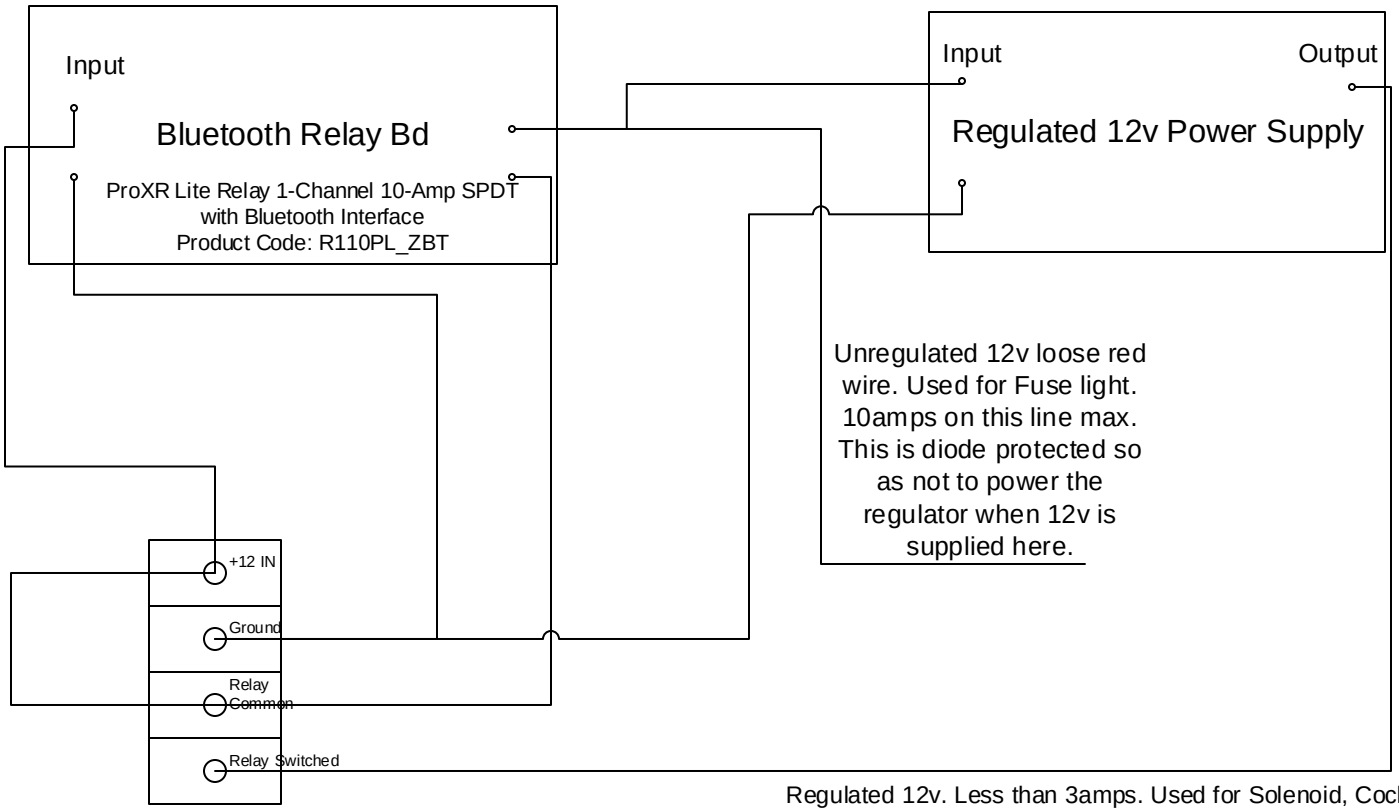

Regulated 12v. Less than 3amps. Used for Solenoid, Cockpit indicator, or to switch another relay low draw. Putting a load of greater than 3 amps on this line will cook this regulator box.

4pinMolexMaleFromBoard _____

①	②	③	④

Pin #1 +12v in _____

Pin #2 - Ground _____

Pin #3 relay common +12 _____

Pin #4 Relay switched out +12 _

Notes: Pins 1 & 3 on the 4 pin Molex can be jumpered On aircraft side

N687MS RV-S8- DWG29
BT Relay
Mike Stewart
Last Edit date 10/22/15

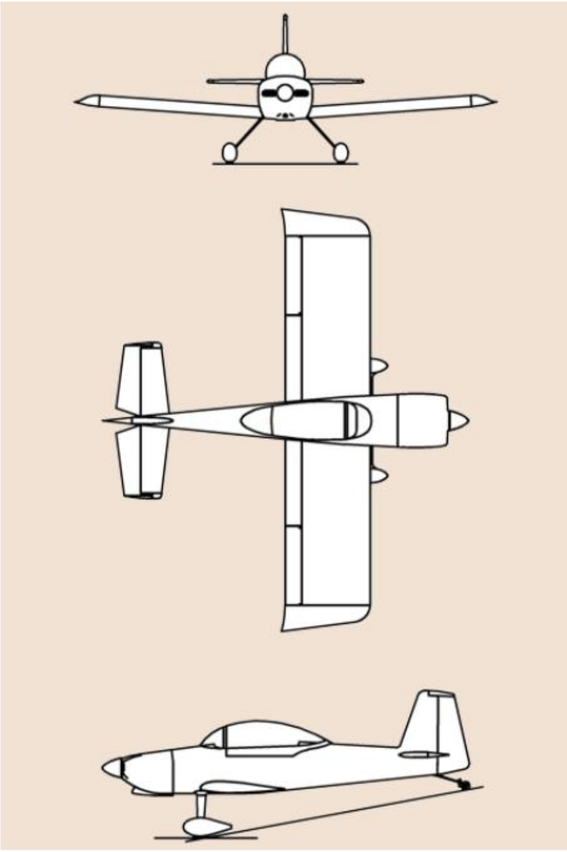

Paint Notes
Sikens Color Build #9
3:1:1 Primer:Hardner: Activator

Sikens Primer #1
100:50:30
Primer: Sealer: Reducer

Siken Base Color
2:1 Base Color:Reducer
Max 45min between primer and base

Sikens Clear
100:50:30
Clear: Hardner: Activator

My Paint codes are :

2005 Ford C2 Gold Ash Stripe

2004 Ford G2 Redfire Pearl Metallic from 2002-05 Mustangs

GMC 47 Medium Green Metallic 2001-04 Yukon

N687MS RV-S8- DWG98
RV-8 3 view
Mike Stewart
Last Edit date 10/22/15

3 pin connector _____

Pin #1 _____
Pin #2 _____
Pin #3 _____

5 pin connector _____

Pin #1 _____
Pin #2 _____
Pin #3 _____
Pin #4 _____
Pin #5 _____

4 pin connector _____

Pin #1 _____
Pin #2 _____
Pin #3 _____
Pin #4 _____

12 Pin Connector _____

Pin #1 _____
Pin #2 _____
Pin #3 _____
Pin #4 _____
Pin #5 _____
Pin #6 _____
Pin #7 _____
Pin #8 _____
Pin #9 _____
Pin #10 _____
Pin #11 _____
Pin #12 _____

15 Pin Connector _____

Pin #1 _____
Pin #2 _____
Pin #3 _____
Pin #4 _____
Pin #5 _____
Pin #6 _____
Pin #7 _____
Pin #8 _____
Pin #9 _____
Pin #10 _____
Pin #11 _____
Pin #12 _____
Pin #13 _____
Pin #14 _____
Pin #15 _____

2 Pin Connector _____

Pin #1 _____
Pin #2 _____

6 Pin Connector _____

Pin #1 _____
Pin #2 _____
Pin #3 _____
Pin #4 _____
Pin #5 _____
Pin #6 _____

9 Pin Connector _____

Pin #1 _____
Pin #2 _____
Pin #3 _____
Pin #4 _____
Pin #5 _____
Pin #6 _____
Pin #7 _____
Pin #8 _____
Pin #9 _____

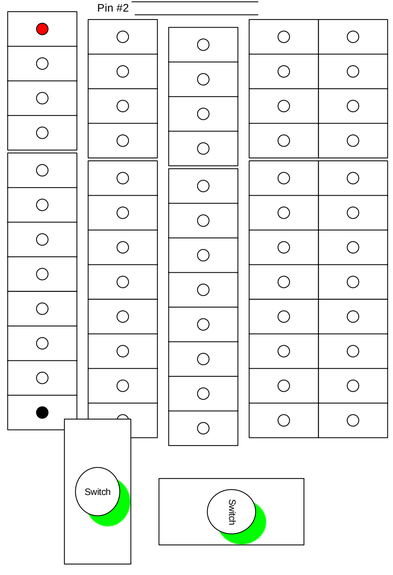

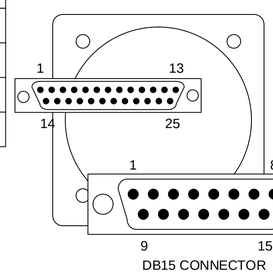

DB15 CONNECTOR
VIEW FROM REAR

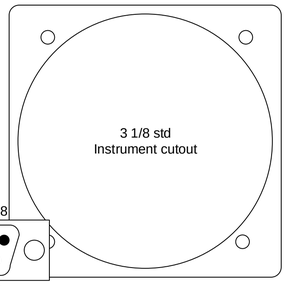

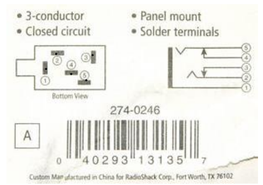

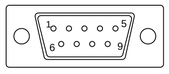

4 pin connector _____

1	2	3	4

Pin #1 _____
Pin #2 _____
Pin #3 _____
Pin #4 _____

2 Pin Connector _____

1	2

Pin #1 _____
Pin #2 _____

9 Pin Connector _____

1	4	7
2	5	8
3	6	9

Pin #1 _____
Pin #2 _____
Pin #3 _____
Pin #4 _____
Pin #5 _____
Pin #6 _____
Pin #7 _____
Pin #8 _____
Pin #9 _____

1	4	7
2	5	8
3	6	9

1	2

1	4	7	10
2	5	8	11
3	6	9	12

1	4	7	10	13
2	5	8	11	14
3	6	9	12	15

5 pin connector _____

1	2	3	4	5

Pin #1 _____
Pin #2 _____
Pin #3 _____
Pin #4 _____
Pin #5 _____

4 pin connector _____

1	2	3	4

Pin #1 _____
Pin #2 _____
Pin #3 _____
Pin #4 _____

12 Pin Connector _____

1	4	7	10
2	5	8	11
3	6	9	12

Pin #1 _____
Pin #2 _____
Pin #3 _____
Pin #4 _____
Pin #5 _____
Pin #6 _____
Pin #7 _____
Pin #8 _____
Pin #9 _____
Pin #10 _____
Pin #11 _____
Pin #12 _____

6 Pin Connector _____

1	2	3
4	5	6

Pin #1 _____
Pin #2 _____
Pin #3 _____
Pin #4 _____
Pin #5 _____
Pin #6 _____

6 Pin Connector _____

1	2	3
4	5	6

Pin #1 _____
Pin #2 _____
Pin #3 _____
Pin #4 _____
Pin #5 _____
Pin #6 _____

9 Pin Connector _____

1	4	7
2	5	8
3	6	9

Pin #1 _____
Pin #2 _____
Pin #3 _____
Pin #4 _____
Pin #5 _____
Pin #6 _____
Pin #7 _____
Pin #8 _____
Pin #9 _____

15 Pin Connector _____

1	4	7	10	13
2	5	8	11	14
3	6	9	12	15

Pin #1 _____
Pin #2 _____
Pin #3 _____
Pin #4 _____
Pin #5 _____
Pin #6 _____
Pin #7 _____
Pin #8 _____
Pin #9 _____
Pin #10 _____
Pin #11 _____
Pin #12 _____
Pin #13 _____
Pin #14 _____
Pin #15 _____

9 Pin Connector _____

1	4	7
2	5	8
3	6	9

Pin #1 _____
Pin #2 _____
Pin #3 _____
Pin #4 _____
Pin #5 _____
Pin #6 _____
Pin #7 _____
Pin #8 _____
Pin #9 _____

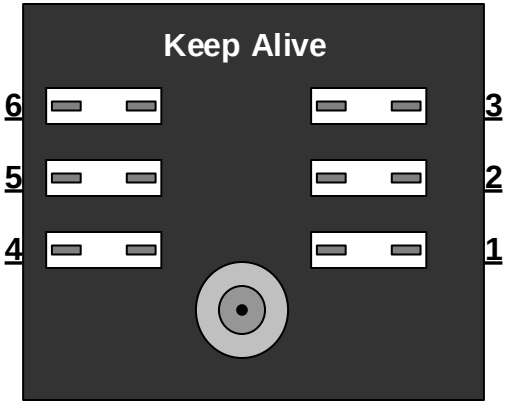

Pin #1 _____
Pin #2 _____
Pin #3 _____
Pin #4 _____
Pin #5 _____
Pin #6 _____

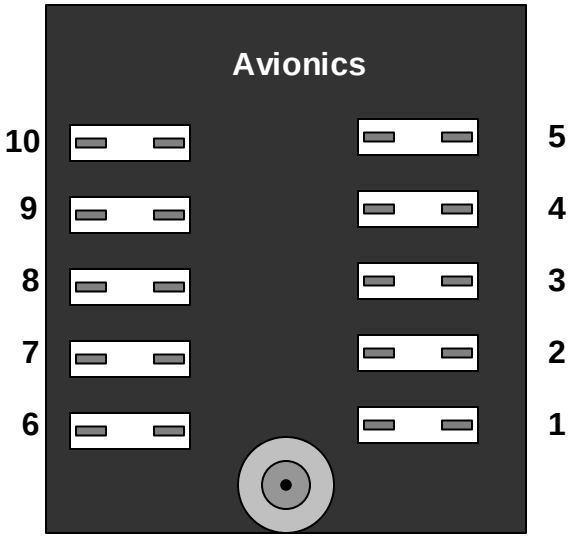

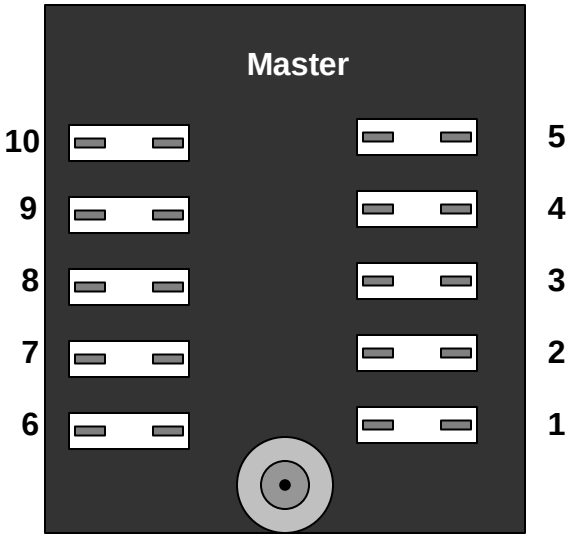

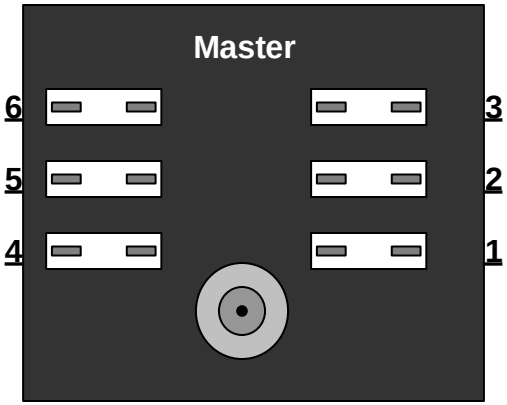

Pin #1 _____
Pin #2 _____
Pin #3 _____
Pin #4 _____
Pin #5 _____
Pin #6 _____

Pin #1 _____
Pin #2 _____
Pin #3 _____
Pin #4 _____
Pin #5 _____
Pin #6 _____
Pin #7 _____
Pin #8 _____
Pin #9 _____
Pin #10 _____

Pin #1 _____
Pin #2 _____
Pin #3 _____
Pin #4 _____
Pin #5 _____
Pin #6 _____
Pin #7 _____
Pin #8 _____
Pin #9 _____
Pin #10 _____